MODEL EFFECTIVITY	REVISIONS				
	REV	DESCRIPTION	DATE	APPROVED	
				GDS	WWE SEH
	-	**INITIAL RELEASE**	8/10/05		
	A	Minor revisions to reflect modifications made during installation training at TACOM 8/11-12/05.	8-17-05		

CONTRACT NO.		KIDDE DUAL SPECTRUM® A Division of KIDDE *Technologies, Inc.* GOLETA, CALIFORNIA		
PREP W. Elliott	7/19/2005	TITLE **INSTALLATION INSTRUCTIONS** **M1114 UP-ARMORED HMMWV AFES**		
CHKR G. Simpson	8/10/05			
APVD S. E. Hodges	10 Aug 05			
APVD		SIZE A	CAGE CODE 05BU0	NUMBER 160419
		SCALE	REV - A	SHEET 1 OF 37

INSTALLATION INSTRUCTIONS
M1114
AUTOMATIC FIRE EXTINGUISHING SYSTEM (AFES)

Table of Contents

1. PURPOSE 5
2. COMPONENTS 5
3. COMPONENT LOCATIONS 8
4. MOUNTING BRACKET INSTALLATIONS 9
   - 4.1 Crew Extinguisher Mounting Bracket 9
   - 4.2 Cargo Extinguisher Mounting Bracket 10
   - 4.3 Roadside Fire Sensor Mounting Bracket 14
   - 4.4 Curbside Fire Sensor Mounting Bracket 15
   - 4.5 Control Module Mounting Bracket 16
5. COMPONENT MOUNTING 17
   - 5.1 Control Module Installation 17
   - 5.2 Fire Sensor Installation 17
   - 5.3 Crew Extinguisher Installation 18
   - 5.4 Cargo Extinguisher Installation 19
   - 5.5 Wiring Harness Installation 20
6. AFES FUNCTIONAL TEST 24
   - 6.1 Purpose 24
   - 6.2 Activate AFES 24
   - 6.3 Functional Test Description 24
   - 6.4 Preparations for Test 24
   - 6.5 System Functional Test 25
7. SYSTEM OPERATION 26
   - 7.1 Normal Operation 26
   - 7.2 Clearing Fault Condition 27
   - 7.3 After AFES Activation 27

Illustrations

Figure 1. Location of Major AFES Components 8
Figure 2. Crew Extinguisher Bracket 9
Figure 3. Cargo Area Rework 10
Figure 4. Wire Access Hole in Cargo Compartment 11
Figure 5. Wire Access Hole in Crew Compartment 12
Figure 6. Cargo Extinguisher Bracket 13
Figure 7. Roadside Sensor Bracket 14
Figure 8. Curbside Sensor Bracket 15
Figure 9. Control Module Bracket 16
Figure 10. Typical Fire Sensor Installation 17
Figure 11. Crew Extinguisher Installation 18
Figure 12. Cargo Extinguisher Installation 19
Figure 13. Battery Lead Connections 21
Figure 14. Roadside Sensor Harness 22
Figure 15. Harness Attachment to Ceiling 22
Figure 16. Routing Through Rear Ceiling Brackets 23
Figure 17. Schematic, Electrical Harness 23
Figure 18. IRR Unit Alignment to Sensor 25

Tables

Table 1. AFES Major Components 5
Table 2. Mounting Hardware Kit (Item 11) 6
Table 3. Crew Extinguisher Bracket Assembly (Item 8) 7
Table 4. Cargo Extinguisher Bracket Assembly (Item 10) 7
Table 5. Wiring Harness Lead Designations 20

Drawings

Drawing 421696 PM-3MT……..28
Drawing 421700 Control Module……..……29
Drawing 421157 Fire Extinguisher……..……..30
Drawing 55845-4 Nozzle, Deflector……..31
Drawing 421746 End of Line Device……..……32
Drawing 421749 Crew Bracket Assembly……33
Drawing 421750 Cargo Bracket Assembly……..34
Drawing 421755 Mounting Hardware Kit…..……..35
Drawing 421759 Control Module Bracket……..36
Drawing 421760 Crew Sensor Bracket Left……..……37
Drawing 421761 Crew Sensor Bracket Right……..38
Drawing 421783 M1114 AFES Kit……..……..39

1. PURPOSE

This document provides detailed instructions for installing the Automatic Fire and Extinguishing System (AFES) onto the M1114 Up Armored HMMWV. The AFES system provides protection for the crew and cargo compartments and is capable of detecting and suppressing hydrocarbon fuel fires and explosions initiated by various threats. The AFES system consists of two (2) crew optical fire sensors, one (1) cargo optical fire sensor, a control module, crew fast discharge fire extinguisher, cargo fast discharge fire extinguisher, an electrical wiring interface harness and mounting hardware for system components.

2. COMPONENTS

Table 1 identifies major components that will be installed using mounting hardware per Table 2.

Table 1. AFES Major Components

Item	Qty	Part Number	Description
1	3	421696	Fire Sensor, PM-3MT
2	2	55845-4	Nozzle, Deflector
3	2	421157	Extinguisher, Fire
4	2	SAE 070120-24-20	Hose Adapter, Steel
5	1	421700	Control Module
6	1	421746	End Of Line Device
7	1	421748	Wiring Harness
8	1	421749	Bracket, Crew Extinguisher Kit
9	1	421781	Hose Assembly
10	1	421750	Bracket, Cargo Extinguisher Kit
11	1	421755	Mounting Hardware Kit
12	2	SAE 070221-20-20S	Elbow, Swivel, 90º, Steel
13	1	421759	Bracket, Control Module
14	1	421760	Bracket, Left Crew Sensor
15	1	421761	Bracket, Right Crew Sensor

Table 2. Mounting Hardware Kit (Item 11)

Qty	Description
3	3/8-16 x 3.5 lg. Cap Screw, Grade 5
3	3/8-16 Locknut
3	3/8 Flat Washer
4	3/8 x 1 1/2 dia. Body Washer
4	3/8 x 2 dia. Body Washer
1	5/16-18 x 3.5 lg. Cap Screw, Grade 5
1	5/16-18 Locknut
2	¼ ID Star Washer
6	#10-24 x 0.75 lg. Pan Head Screw, Phillips
6	#10-24 Locknut
6	#10 Star Washer
2	#8-32 x 0.50 Pan Head Screw
2	#8-32 Locknut
24	11 inch Tie-wrap
24	8 inch Tie-wrap
4	0.5 dia. Cushioned Clamp
2	2.5 dia. Hose Clamp
8 inches	Edge Grommet, 1/8 wide
4	¼-20 Locknut,

Table 3. Crew Extinguisher Bracket Assembly (Item 8)

Qty	Part Number	Description
1	421751	Weldment Bracket *
2	C-420C-75-584S	Band Clamp *
1	421780	Foot Plate
1		3/8-16 x 1.5 lg, Cap Screw
1		3/8 ID Flat Washer
1		3/8-16 Locknut

* These items are preinstalled

Table 4. Cargo Extinguisher Bracket Assembly (Item 10)

Qty	Part Number	Description
1	421753	Cargo Extinguisher Bracket
4		3/8-16 x 1 lg. Cap Screw
2		3/8-16 x 1.5 lg. Cap Screw
8		3/8 ID Flat Washer
6		3/8-16 Locknut
2		¼-20 x 1.00 lg. Cap Screw
4		¼ ID Flat Washer
2		¼-20 Locknut
1	421096	Nozzle Mount Bracket
2	C-420C-75-584S	Band Clamp
1	406332	Fire Extinguisher Bracket
1	421758	Cargo Sensor Bracket
1	8456K745	Rubber Pad

3. COMPONENT LOCATIONS

Figure 1 identifies AFES component locations in the M1114 vehicle.

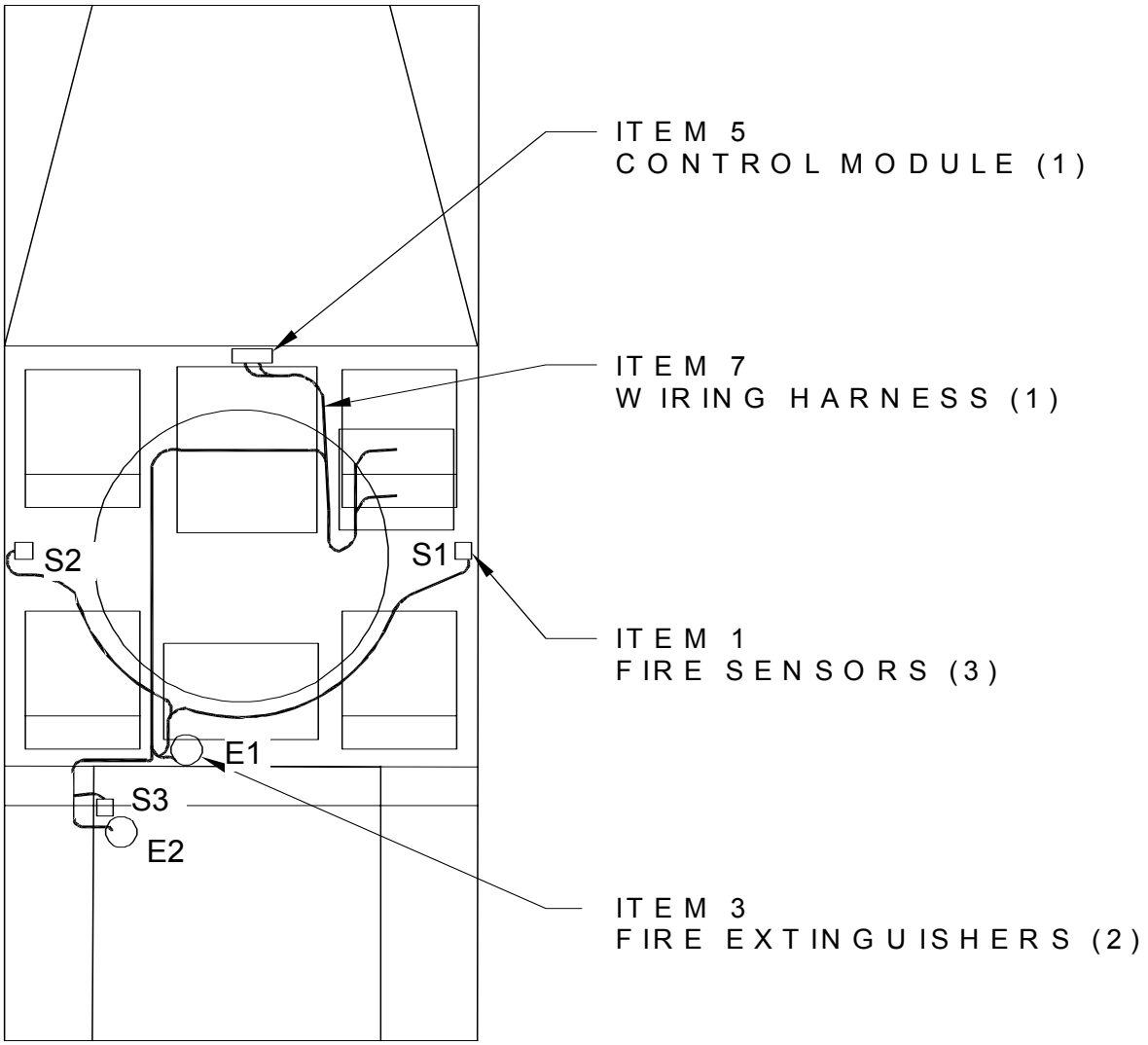

Figure 1. Location of Major AFES Components

4. MOUNTING BRACKET INSTALLATIONS

4.1 Crew Extinguisher Mounting Bracket

Attach the Crew Extinguisher Bracket (Item 8) to existing hardware behind the gunner station as shown in Figure 2. The two upper mounts are studs with a nut on each end. In some cases the upper nut has ¼ inch or more or threads extending beyond the nut. In that case it may be necessary to extend the stud downward by backing the upper nut off until only a thread or two extend beyond the upper nut. This can most easily be accomplished by using 2 jam nuts at the lower threaded portion of the stud. The lower bolt is an existing bolt through the ballistic bulkhead.

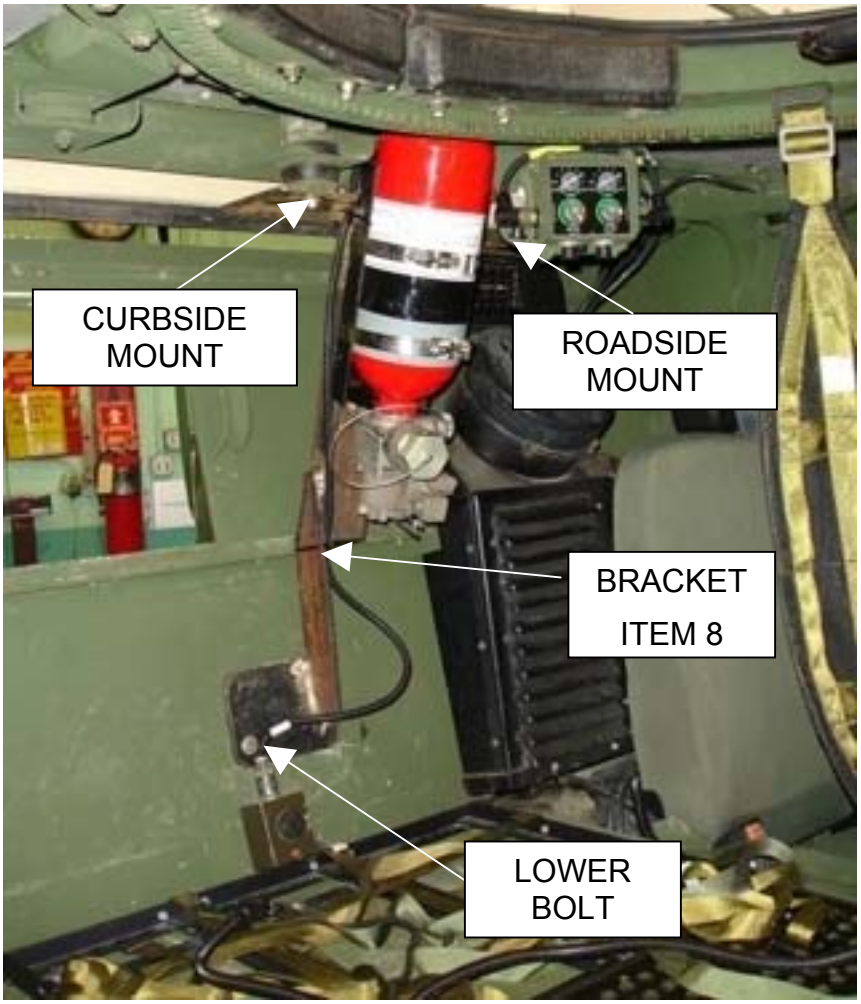

Figure 2. Crew Extinguisher Bracket

4.2 Cargo Extinguisher Mounting Bracket

Remove one existing fuel can mounting bracket and the web strap as shown in Figure 3.

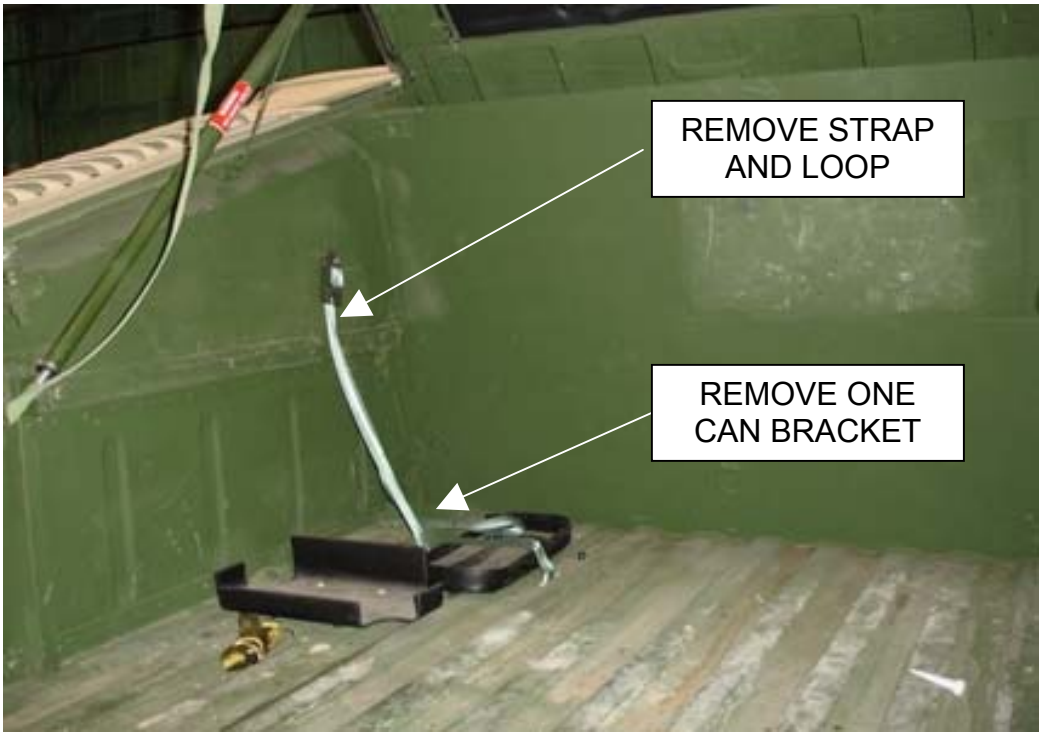

Figure 3. Cargo Area Rework

From inside the cargo compartment, drill a 1 1/4 “ diameter hole through the roadside wall as shown in Figure 4.

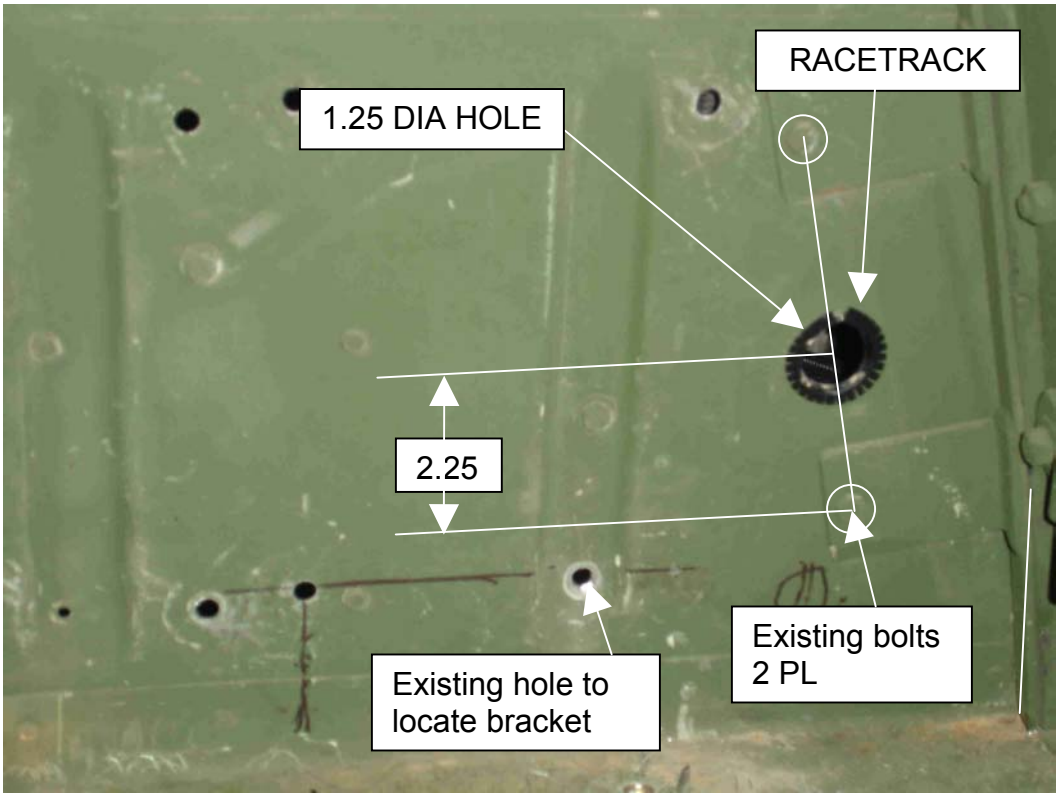

Figure 4. Wire Access Hole in Cargo Compartment

From inside the crew compartment behind the roadside passenger seat, remove the cover panel (6 bolts) and drill a 1 1/4 " diameter hole through the sloped panel as shown in Figure 5. Cut the racetrack in half and apply it to the inside of each 1 ¼ " hole.

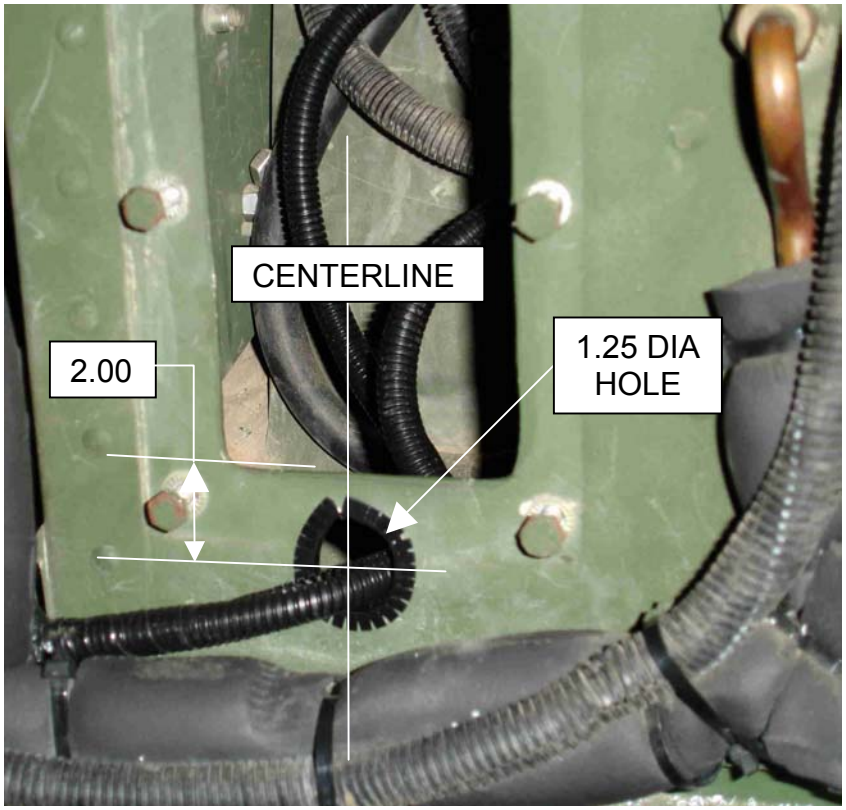

Figure 5. Wire Access Hole in Crew Compartment

Assemble the Cargo Extinguisher Bracket (Item 10) per drawing 421750 and Table 4. Locate it in the cargo bay using the existing hole (Figure 4) from a ¼" bolt that goes through an existing hole in the armor plate. A 5/16 x 3.5 bolt should fit through this hole. Match-drill three new holes through the wheel-well wall with a 3/8" diameter bit.

Attach the bracket first with the 5/16" bolt, nut and body washer as used for 3/8" bolts. Install three each 3/8 x 3.50 lg. hex head cap screws, 1 1/2 and 2 dia. body washers on the wheel side, and locknuts. The access to install the upper forward nut and washers is inside the access space behind the rear roadside seat.

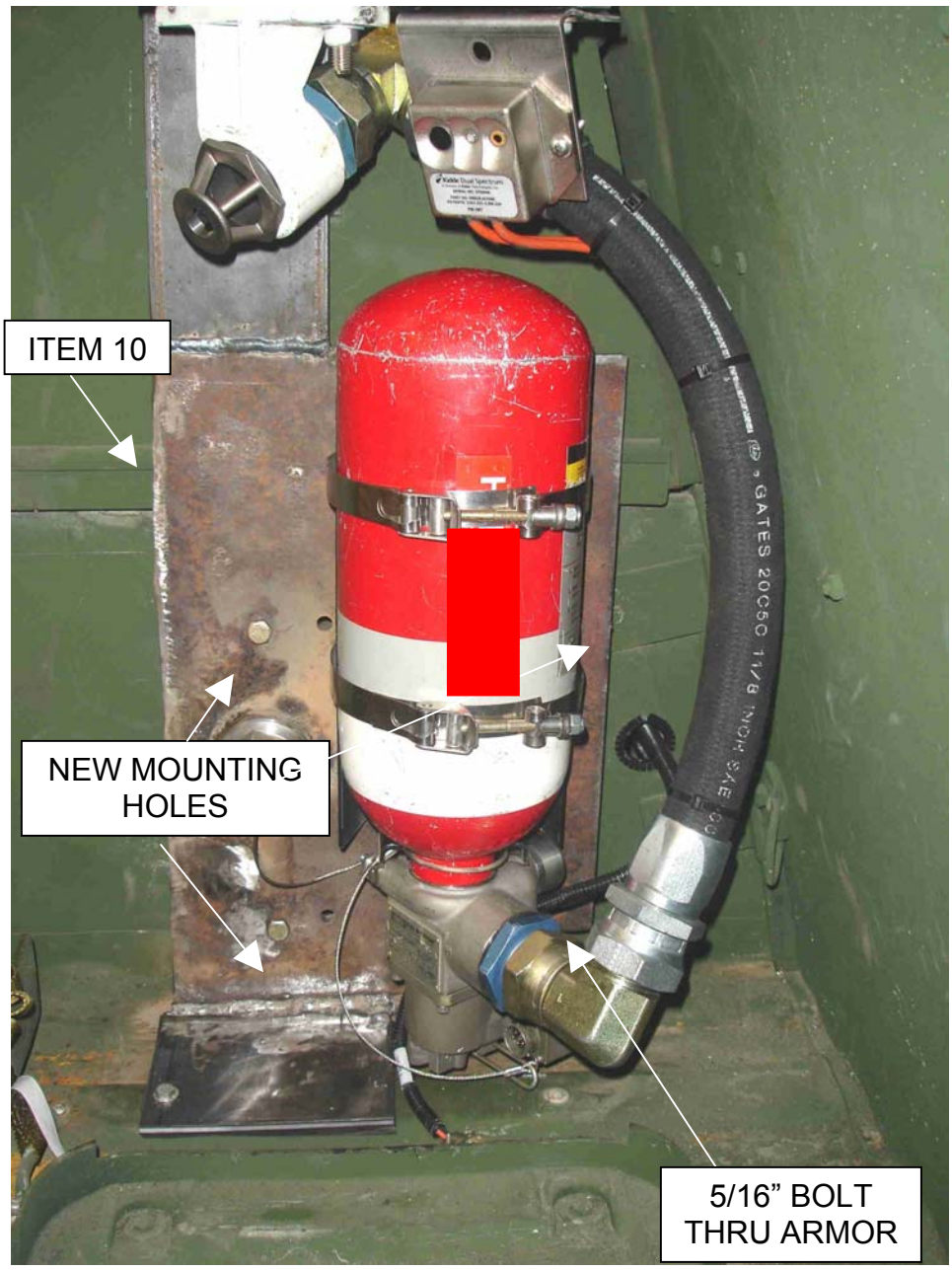

Figure 6. Cargo Extinguisher Bracket

4.3 Roadside Fire Sensor Mounting Bracket

Attach the Left Crew Sensor Bracket (Item 14) by first bolting the foot plate to an existing ¼ inch bolt in the upper sidewall of the vehicle, adding a star washer between the bracket and the hull. Then slip a 2.5 dia. Hose Clamp through the slots in the bracket and secure the clamp to the gun ring support bar as shown in Figure 7.

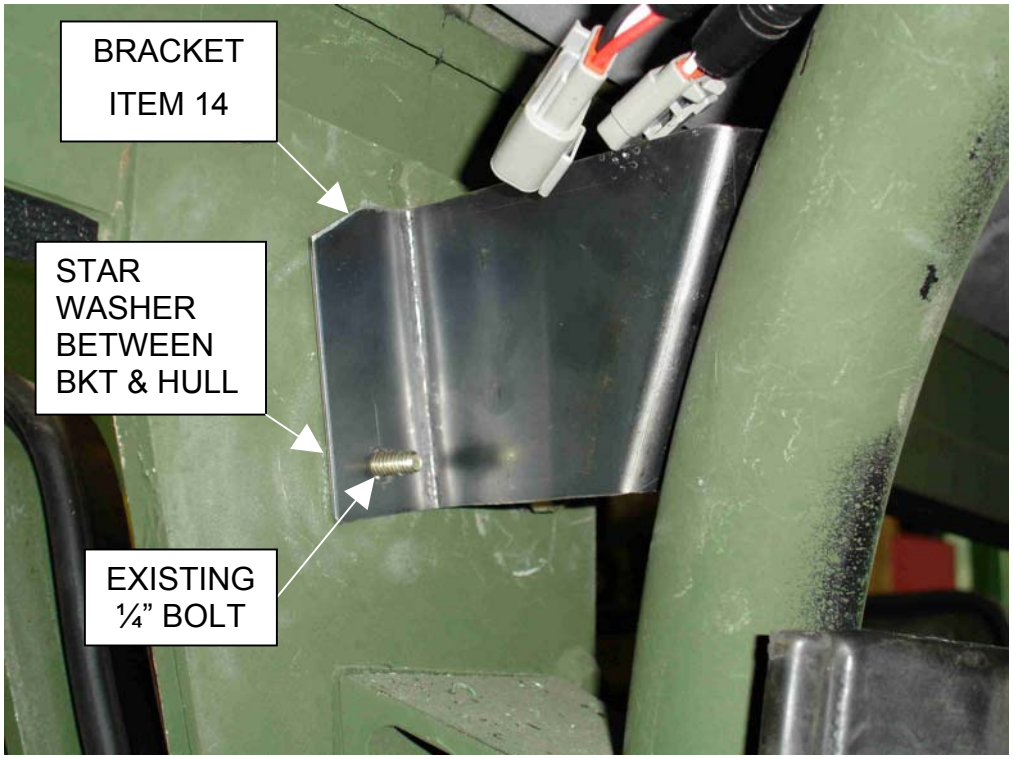

Figure 7. Roadside Sensor Bracket

4.4 Curbside Fire Sensor Mounting Bracket

Attach the Right Crew Sensor Bracket (Item 15) by first bolting the foot plate to an existing ¼ inch bolt, adding a star washer between the bracket and the hull, in the upper sidewall of the vehicle. Then slip a 2.5 dia. Hose Clamp through the slots in the bracket and secure the clamp to the gun ring support bar as shown in Figure 8.

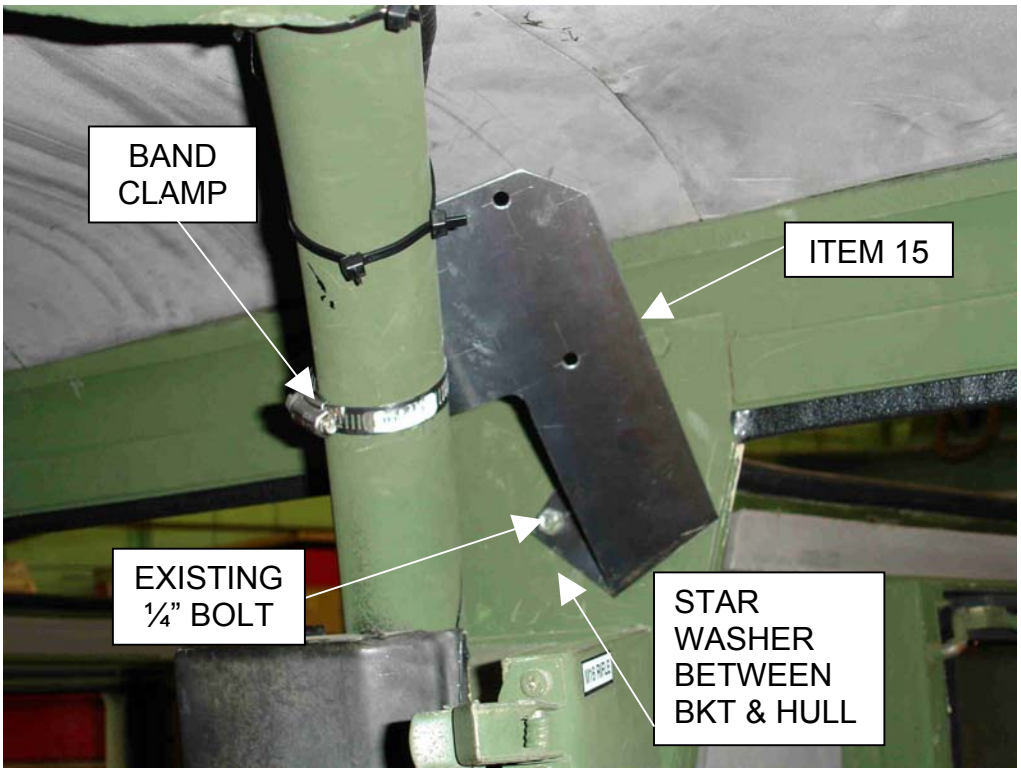

Figure 8. Curbside Sensor Bracket

4.5 Control Module Mounting Bracket

Mount the Control Module Bracket (Item 13) in front of the main radio rack on two existing bolts per Figure 9.

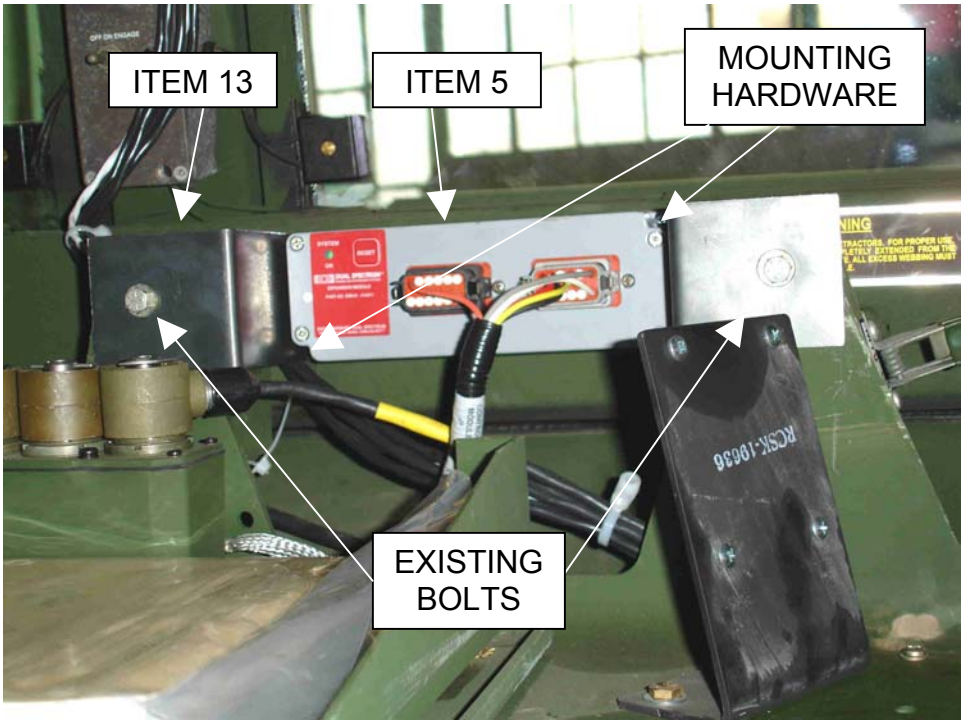

Figure 9. Control Module Bracket

5. COMPONENT MOUNTING

5.1 Control Module Installation

Mount the Control Module (Item 5) to its bracket with #8 x 1/2 pan head screws (2) and locknuts (2) per Figure 9.

5.2 Fire Sensor Installation

Mount three Fire Sensors (Item 1) to their brackets in the crew and cargo compartments with #10 x 3/4 pan head screws, star washers, and locknuts (2 ea) from the mounting hardware kit. See Figure 10.

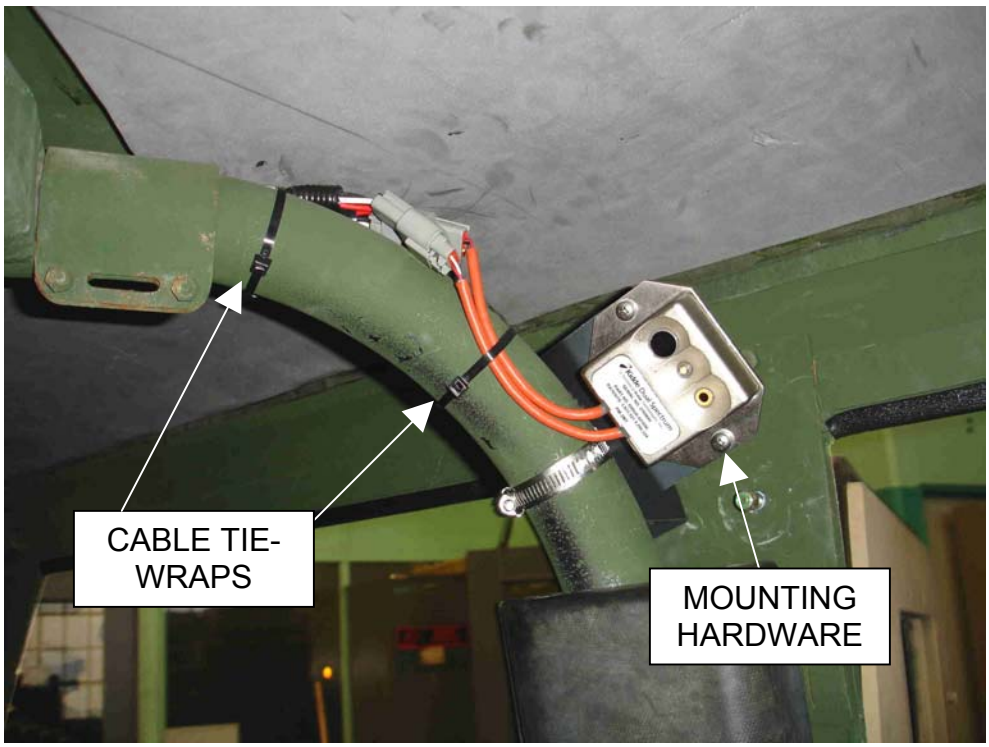

Figure 10. Typical Fire Sensor Installation

5.3 Crew Extinguisher Installation

CAUTION

DO NOT HANDLE THE FIRE EXTINGUISHER UNLESS THE ANTI-RECOIL PLUG IS INSTALLED IN THE VALVE OUTLET PORT AND THE MANUAL LEVER LOCK PIN IS INSTALLED IN THE LEVER LOCK HOLES

Install one Fire Extinguisher (Item 3) into the crew bracket and secure it with the band clamps. **Note: Orient the outlet port towards the center of the gun ring and tighten the band clamp nuts**. See Figure 11.

Figure 11. Crew Extinguisher Installation

CAUTION

DO NOT LOOK INTO THE VALVE OUTLET PORT. AGENT DISCHARGES RAPIDLY WITH HIGH IMPACT FORCE. DISCHARGING AGENT CAN FREEZE SKIN, CAUSING FROSTBITE

Remove the anti-recoil plug from the valve and secure it into its stowage bracket. Install a nozzle (Item 2) into the valve outlet port.

5.4 Cargo Extinguisher Installation

Mount one Hose Adapter (Item 4) into the backside of the nozzle mount and install a nozzle (Item 2) into the front side.

CAUTION

DO NOT HANDLE THE FIRE EXTINGUISHER UNLESS THE ANTI-RECOIL PLUG IS INSTALLED IN THE VALVE OUTLET PORT AND THE MANUAL LEVER LOCK PIN IS INSTALLED IN THE LEVER LOCK HOLES

Install one Fire Extinguisher (Item 3) into the cargo bracket and secure it with the band clamps. Rotate the cylinder counter-counterclockwise until the valve lever bracket rests against the forward side of the extinguisher bracket. Tighten the band clamp nuts.

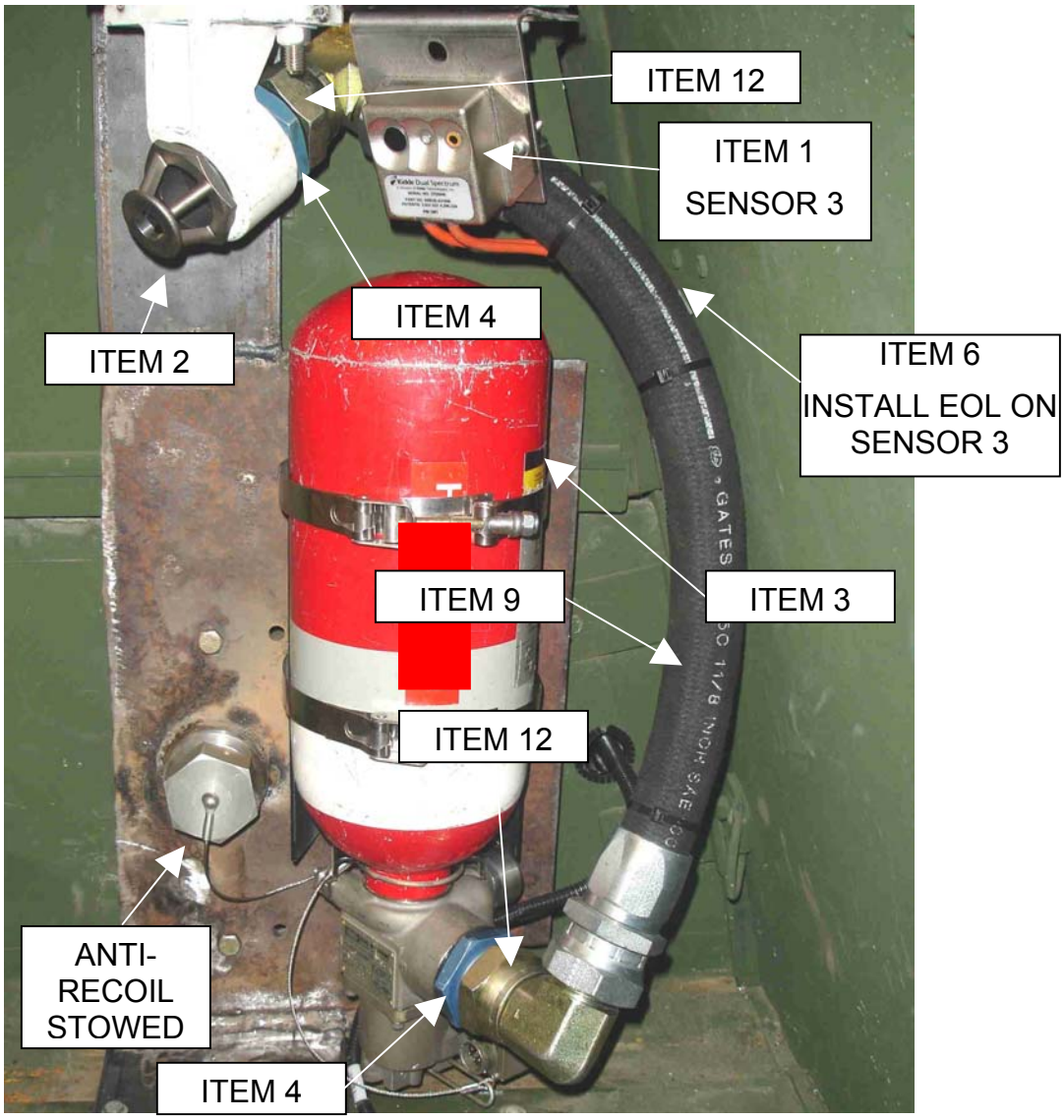

Figure 12. Cargo Extinguisher Installation

CAUTION

DO NOT LOOK INTO THE VALVE OUTLET PORT. LIQUID AND POWDER AGENT DISCHARGES RAPIDLY WITH HIGH IMPACT FORCE. DISCHARGING AGENT CAN DAMAGE SKIN AND EYES.

Remove the anti-recoil plug from the valve and secure it into its stowage bracket.

Install one Hose Adapter (Item 4) into the valve outlet port.

Loosely attach a Swivel Elbow (Item 12) to each end of the Hose Assembly (Item 9). Install the assembly onto both Hose Adapters and tighten four swivel nuts.

5.5 Wiring Harness Installation

Unwrap the Wiring Harness (Item 7) and position it inside the vehicle approximately as shown in Figure 1. Table 5 identifies wire leads. Route the harness under the rubber pad on the transmission cover and beneath the radio rack platform between the driver and co-driver. Take care that the harness routing be such that the harness will not be damaged when reinstalling components.

Table 5. Wiring Harness Lead Designations

Designation	Connectors	Destination
Sensor 1	J3, J4	Right Crew Sensor (Co-Driver)
Sensor 2	J6, J7	Left Crew Sensor (Driver)
Sensor 3	J5	Cargo Sensor
Control Module	J1, J2	Control Module (Dashboard)
Valve 1	J9	Crew Extinguisher
Valve 2	J8	Cargo Extinguisher
+, -	Rings	Battery Terminals

Remove the co-driver seat from the battery box. Route the wiring harness battery legs (ring terminals with + and - labels) through the hole behind the battery box and attach the ring terminals to plus and minus posts (24 VDC) as shown in Figure 13. CAUTION: The system must be connected to 24 volt only in order to function correctly.

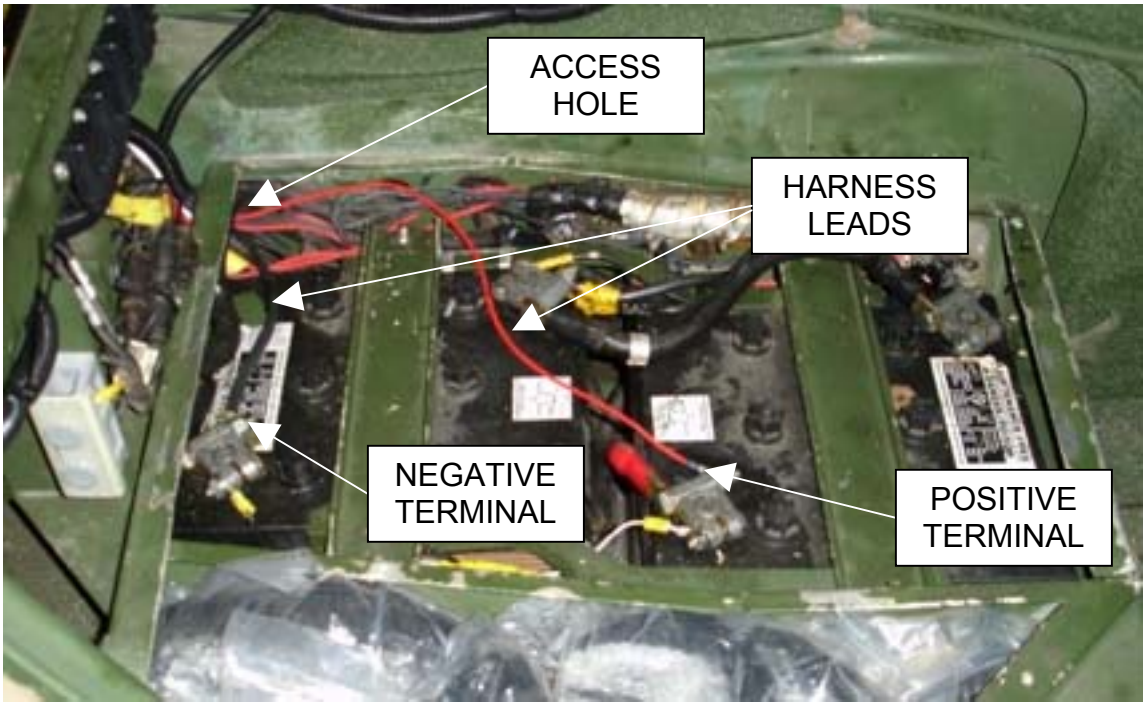

Figure 13. Battery Lead Connections

Position the J1-J2 leg close to the control module, but do not attach the connectors at this time.

Unscrew the cover panel along the driver's right and run the harness through this area from the radio rack to the rear seat. Secure the harness with three tie-wraps and reinstall the cover panel.

Route the J8 and J5 leads through the access holes cut into the rear bulkheads and pull the leads into the cargo compartment. Reinstall the rear crew cover panel and 6 screws. Attach the connectors to the extinguisher valve and fire sensor. Attach the End Of Line Device (Item 6) to the unused lead of the cargo sensor. Secure the sensor wiring to the hose with three tie-wraps per Figure 12.

Route the remaining harness legs up to the ceiling and secure wiring with three tie-wraps.

Drop the J9 valve lead behind the extinguisher and secure it with a tie-wrap.

Route the J6-J7 leads along the gun ring support tube to the roadside sensor. Plug in both connector sets and install two tie-wraps per Figure 14.

Secure the harness to the ceiling with two cushioned clamps as illustrated in Figure 15.

Install any remaining tie-wraps where necessary to secure the harness.

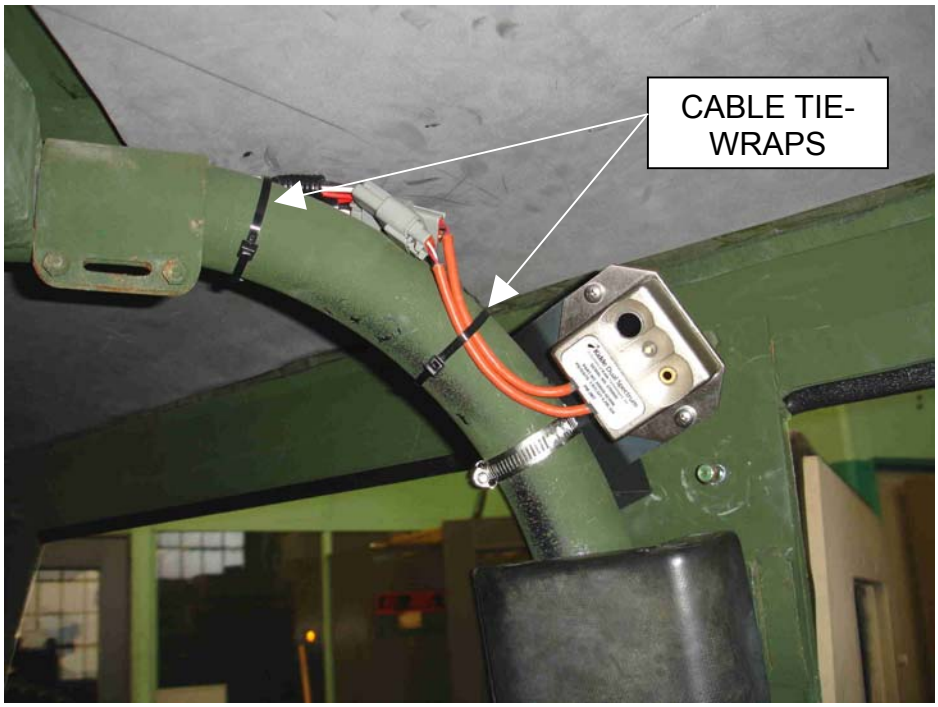

Figure 14. Roadside Sensor Harness

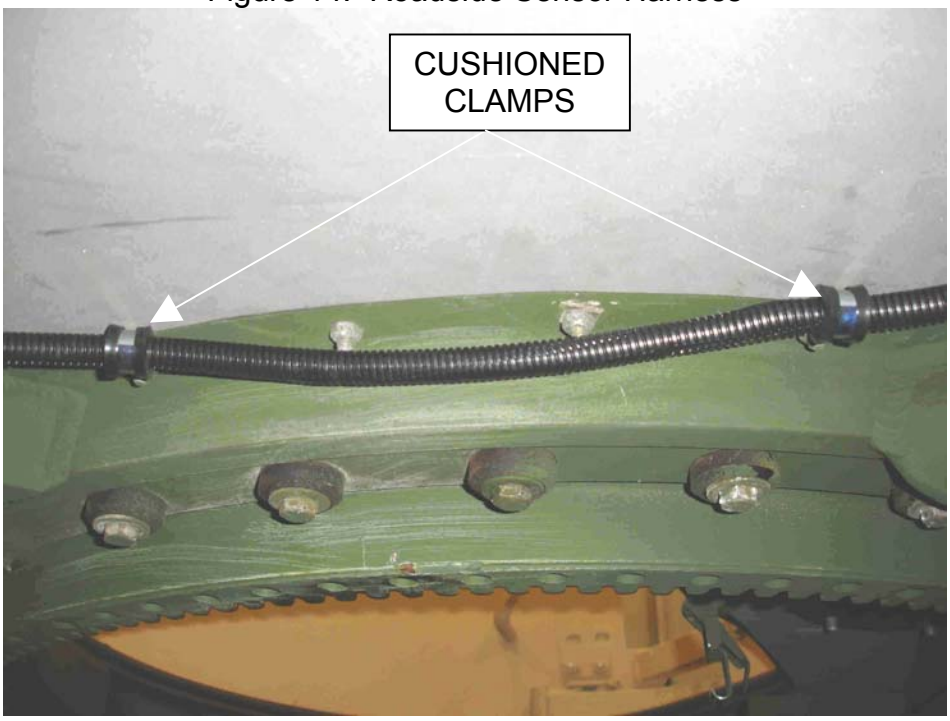

Figure 15. Harness Attachment to Ceiling

Run the curbside sensor lead (J3-J4) above and through two brackets shown in Figure 16, attach to the gun-ring bolts with cushioned clamps per Figure 15, and attach both sensor connectors. Install tie-wraps as for the roadside sensor.

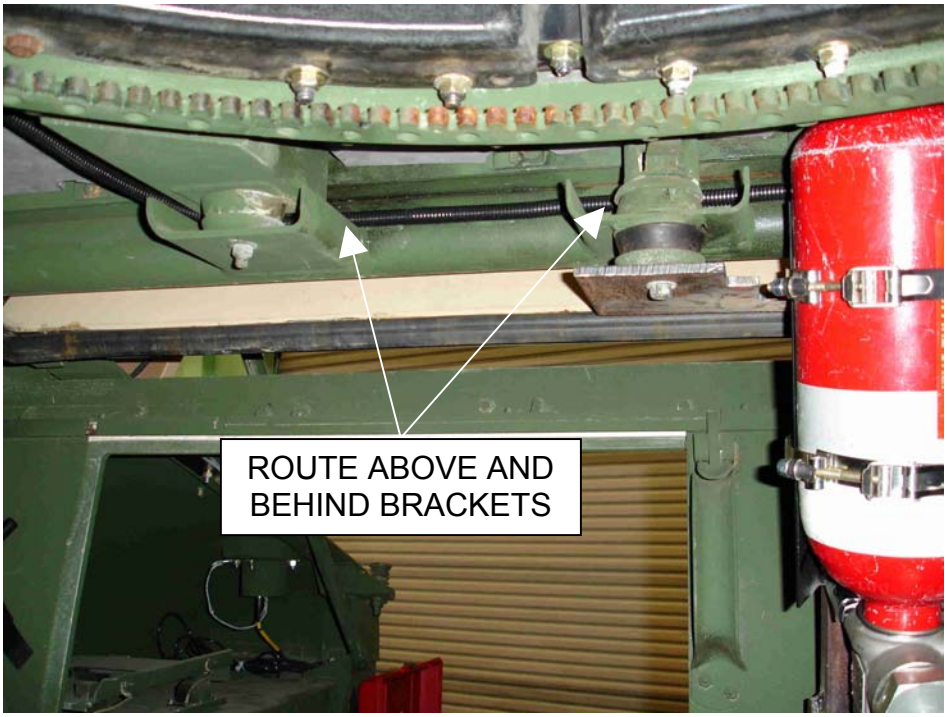

Figure 16. Routing Through Rear Ceiling Brackets

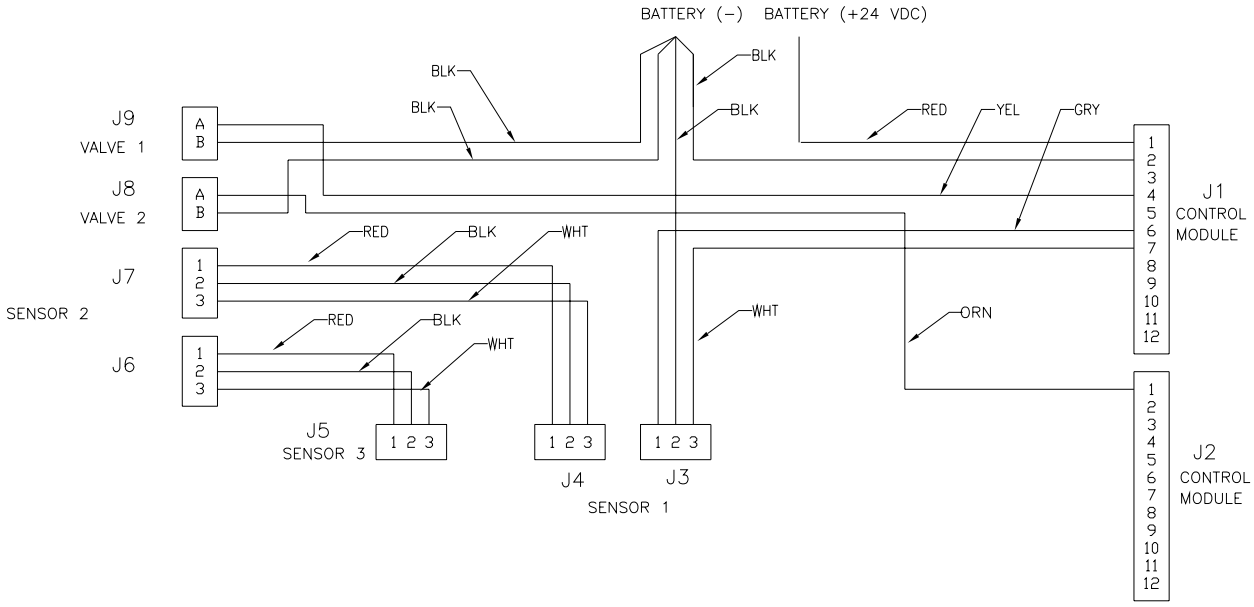

Figure 17. Schematic, Electrical Harness

6. AFES FUNCTIONAL TEST

6.1 Purpose

These tests verify proper installation and operation of the Automatic Fire and Extinguishing System (AFES) on the M1114 vehicle. Fire Suppression System (FSS) Test Set part number 421762 is used to conduct these tests.

6.2 Activate AFES

After completion of the installation, insert connectors J1 and J2 into the control module receptacles and allow 5 seconds for the system to power up. If all sensors and extinguishers are properly connected, the control module SYSTEM OK lamp will show continuous green. The electrical connections of the system are fully supervised. A flashing lamp on the control module indicates that one or more of the components are not properly connected. See Figure 17 for a harness schematic to assist in troubleshooting.

At each fire sensor a green lamp will be illuminated when the AFES is powered up.

6.3 Functional Test Description

AFES functional tests performed using the multi-position switch of the IRR unit check for proper operation of the sensors, control module, and wiring harness. The system test set injects optical signals that simulate a subset of actual fire radiation into the fire sensor via the IRR Unit.

WARNING
BEFORE TESTING THE AFES, DISCONNECT
CABLES FROM BOTH VALVES

(1) With the toggle switch in the “DUAL” position, momentarily depressing the TEST switch causes far and near IR fire sensor channels to be energized simultaneously. Valve Simulator activation should occur and the green LED on this sensor should blink.

(2) With the switch in the “FAR” position, momentarily depressing the TEST switch causes only the far infrared energy source to be energized and no Valve Simulator activation should occur.

(3) With the switch in the “NEAR” position, momentarily depressing the TEST switch causes only the far infrared energy source to be energized and no Valve Simulator activation should occur.

6.4 Preparations for Test

(1) Connect the valve simulators to both AFES valve cables.

(2) Connect the power cable to the IRR Unit. Clip the power leads to 24 VDC at plus and minus vehicle battery posts.

(3) Verify that power is applied to the IRR Unit by pressing the TEST switch and observing that it illuminates for approximately 4 seconds.

(4) Test the trouble detection function of the AFES by disconnecting the End Of Line device from the cargo sensor pigtail. This should make the control module SYSTEM OK lamp flash. Repeat this test at each of the valve simulators. After reconnecting all components (except valves, use the simulators) the SYSTEM OK lamp should indicate continuous green.

6.5 System Functional Test

6.5.1 Dual Function Test

(1) Place the IRR Unit switch in the DUAL position.

(2) Place the IRR Unit in front of any fire sensor with the IRR Unit windows pointing into the sensor windows. See Figure 18. Be sure to maintain correct alignment throughout the test period.

Figure 18. IRR Unit Alignment to Sensor

(3) Momentarily press and release the TEST push-button switch and note that the amber indicator is on. Hold the IRR Unit in place until the indicator turns off (about 4 seconds).

(4) Both crew and cargo Valve Simulators should activate during this test.

(5) The LED in the middle of the fire sensor should be flashing. This LED indicates which sensor detected a fire situation. To restore normal sensor LED indication, disconnect and reconnect the sensor's harness connector (J4, J5, or J7) and push the RESET button on the control module.

6.5.2 Far Only False Alarm Test

(1) Place IRR Unit switch in the FAR position.

(2) Place the IRR Unit in front of any fire sensor with the IRR Unit windows pointing in the sensor windows. Be sure to maintain correct alignment throughout the test period.

(3) Momentarily press and release the TEST push-button switch and note that the amber indicator is on. Hold the IRR Unit in place until the indicator turns off.

(4) Neither crew nor cargo Valve Simulator should activate during this test.

(5) If a Valve Simulator activates, this fire sensor is not functioning properly and may give false alarms.

6.5.3 NEAR Only False Alarm Test

(1) Place the IRR Unit switch in the NEAR position.

(2) Place the IRR Unit in front of any fire sensor with the IRR Unit windows pointing in the sensor windows. Be sure to maintain correct alignment throughout the test period.

(3) Momentarily press and release the TEST push-button switch and note that the amber indicator is on. Hold the IRR Unit in place until the indicator turns off.

(4) Neither crew nor cargo Valve Simulator should activate during this test.

(5) If a Valve Simulator activates, this fire sensor is not functioning properly and may give false alarms.

6.5.4 Test Remaining Fire Sensors

(1) Repeat Dual, Far, and Near tests at the remaining fire sensors associated with the AFES.

6.5.5 Reset AFES System

(1) Remove the Valve Simulators from both AFES valve cables and attach the harness connectors to the valves.

(2) Reset the system after all functional tests are complete by unplugging the gray connector from the Control Module, then re-plugging. Lamps on the control panel and each sensor should indicate continuous green.

7. SYSTEM OPERATION

7.1 Normal Operation

The AFES system is powered continuously from vehicle batteries. When all sensors and extinguishers are properly connected, the control module SYSTEM OK lamp will show continuous green.

A gauge on the valve indicates extinguisher pressure. Normal extinguisher pressure is 900 psi at 70° F. Minimum operational pressures at various temperatures are indicated on the extinguisher label.

7.2 Fault Condition

A flashing green control module lamp indicates a fault condition. Either one or more of the system components are not properly connected or a fire suppression event has occurred.

Check and connect all system components to the wiring harness and verify that the SYSTEM OK lamp indicates continuous green.

7.3 After AFES Activation

Replace both fire extinguishers with fully charged units, remove and reconnect the wiring connector (J1) at the Control Module, then press the control panel RESET button to restore normal operation. When the system has been electrically reset and all components are properly connected the green LEDs of both the Control Module and all 3 Sensor LEDs will be on steady. The LED on the Sensor that detected the fire will flash until power is cycled as described here.

COPYRIGHT © 2005
KIDDE DUAL SPECTRUM
UNPUBLISHED WORK –
ALL RIGHTS RESERVED

STATUS LAMP	CONDITION
OFF	OFF
GREEN STEADY	NORMAL
GREEN BLINKING	FIRE ALARM

* NOTE: STATUS LAMP LATCHES GREEN BLINKING AFTER FIRE ALARM. POWER TO SENSOR MUST BE CYCLED TO RESTORE NORMAL LAMP OPERATION.

STATUS LAMP
DETAIL 1

FUEL	X (IN.)
METHANOL	36
GASOLINE	42
DIESEL	42
METHANE	20
HYDROGEN	12

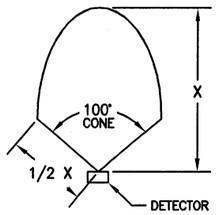

FIRE SENSITIVITY / FIELD-OF-VIEW
DETAIL 2

PIN	FUNCTION
J1–A	POWER IN
J1–B	GROUND IN
J1–C	ALARM OUT
J2–A	POWER OUT
J2–B	GROUND OUT
J2–C	ALARM IN

ELECTRICAL INTERFACE
DETAIL 3

1. OPERATION:
a. THIS ASSEMBLY IS USED IN CONJUNCTION WITH KIDDE CONTROL MODULE 421700 TO PROVIDE OPTICAL FIRE DETECTION
b. MULTIPLE DETECTORS MAY BE CONNECTED IN SERIES. THE LAST DETECTOR IN SERIES SHALL HAVE AN END-OF-LINE DEVICE, KDS P/N 421746, CONNECTED TO J2

2. SPECIFICATIONS:
a. OPERATING TEMPERATURE: –40°C TO +125°C (–40°F TO 257°F)
b. OPERATING VOLTAGE: PROVIDED BY CONTROL MODULE.
c. CURRENT DRAW: 5 mA NOMINAL, 15 mA ALARM (MAX)
d. NOMINAL WEIGHT: .6 LBS
e. ENCLOSURE: ENCLOSURE DESIGNED FOR NEMA 4X RATING
f. MATING CONNECTORS: J1, 3-POSITION DEUTSCH PLUG, P/N DT06-3S, J2, 3-POSITION DEUTSCH RECEPTACLE, P/N DTM04-3P. (DETAIL 3)
g. FIELD OF VIEW: 100° SOLID CONE
h. FIRE RESPONSE: 25 MILLISECONDS MAX TO EXPLOSIVE FIRE.
i. FIRE SENSITIVITY: SEE DETAIL 2. NOTE: LIQUID FUEL SENSITIVITY DETERMINED USING FULLY DEVELOPED 1 SQUARE FOOT PAN FIRE, COMPRESSED GAS SENSITIVITY DETERMINED USING 30 INCH FLARE. SENSITIVITY IS SPECIFIED AT DETECTOR CENTERLINE AND REDUCES BY APPROXIMATELY 1/2 AT EDGES OF FIELD OF VIEW.
j. STATUS LAMP: SEE DETAIL 1. NOTE: STATUS LAMP LATCHES GREEN BLINKING AFTER FIRE ALARM. POWER TO SENSOR MUST BE CYCLED TO RESTORE NORMAL LAMP OPERATION.

3. INSTALLATION:
a. ASSEMBLY MAY BE MOUNTED IN INTERIOR OR EXTERIOR LOCATION PROVIDED LOCATION WILL NOT EXCEED MAXIMUM OPERATING TEMPERATURES OR BE SUBJECT TO EXCESSIVE ENVIRONMENTAL EXTREMES, SEE NOTE 2 ABOVE AND SAEJ1455.
b. ASSEMBLY SHALL BE MOUNTED SUCH THAT FIELD OF VIEW COVERS POTENTIAL FIRE HAZARD AREA(S) AND FACE IS POINTED AT AREA OF GREATEST CONCERN
c. ASSEMBLY SHALL BE MOUNTED VERTICALLY WITH THE CABLES POINTED TOWARD THE GROUND (SEE MOUNTING HOLE TEMPLATE FOR REFERENCE) AND TILTED SUCH THAT WINDOWS POINT BELOW THE HORIZONTAL TO MINIMIZE SUSCEPTIBILITY TO WINDOW CONTAMINATION
d. CAUTION: ENSURE MOUNTING LOCATION PROVIDES ADEQUATE CLEARANCE FOR MAINTENANCE AND TEST (MIN 4 INCHES IN FRONT)
e. REFERENCE MOUNTING HOLE TEMPLATE FOR CUTOUT DIMENSIONS
f. MOUNT ASSEMBLY USING #10 HARDWARE

NOTES: UNLESS OTHERWISE SPECIFIED.

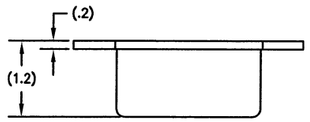

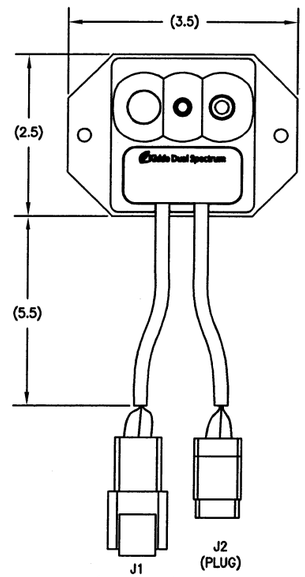

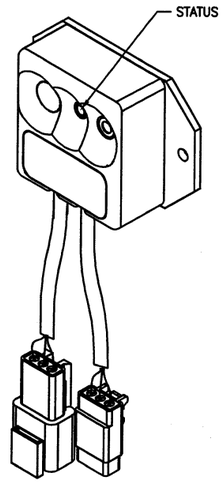

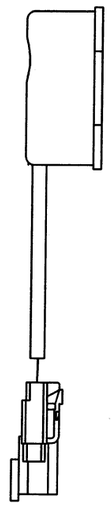

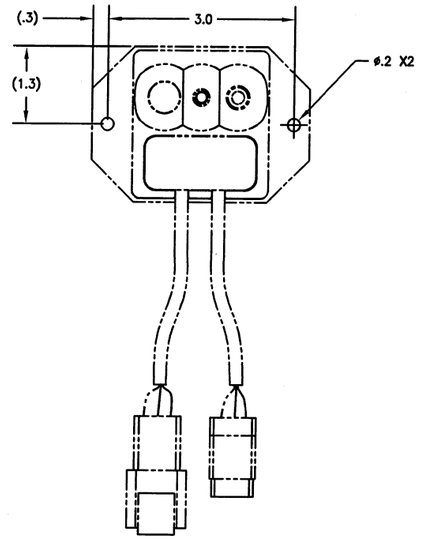

MOUNTING HOLE TEMPLATE
(SHOWN IN CORRECT MOUNTING ORIENTATION)

INTERFACE CONTROL DRAWING

MODEL EFFECTIVITY	REVISIONS			
	SYM	DESCRIPTION	DATE	APPROVED
	–			

QTY REQD	CAGE CODE	PART OR IDENTIFYING NO.	NOMENCLATURE OR DESCRIPTION	ITEM NO.

LIST OF MATERIAL

UNLESS OTHERWISE SPECIFIED DIMENSIONS ARE IN INCHES AND PER ANSI Y14.5M – 1994
XX ± | XXX ± | ANGLES ±
MATERIAL

PART NO.	NEXT ASSY	USED ON
		M1114
APPLICATION		

CAD PREPARED DRAWING USING AUTOCAD 2002
NOT TO BE MANUALLY ALTERED.

Kidde Dual Spectrum
A DIVISION OF
Kidde Technologies, Inc.
GOLETA, CALIFORNIA, 93117

PREP	G. SIMPSON	06/28/05
CHKR		
APVD		
APVD		

FIRE SENSOR,
PM–3MT

SIZE	CAGE CODE	NUMBER	REV
D	05BU0	421696	–

SCALE | SHEET

COPYRIGHT © 2004
KIDDE DUAL SPECTRUM
UNPUBLISHED WORK –
ALL RIGHTS RESERVED

MODEL EFFECTIVITY	REVISIONS			
	SYM	DESCRIPTION	DATE	APPROVED

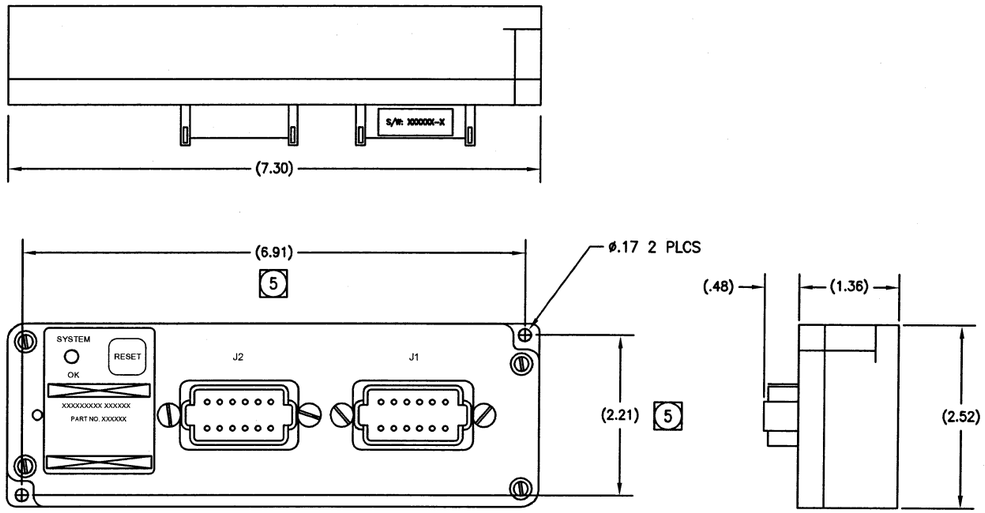

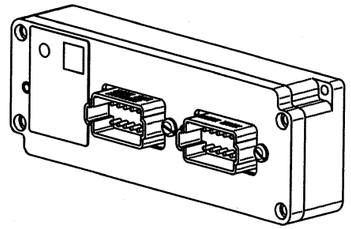

TABULATION I

CONFIGURATION SWITCH (7)	
POSITION	SETTING
1	OFF
2	OFF
3	OFF
4	OFF
5	OFF
6	OFF
7	OFF
8	ON (2 SHOT)
9	OFF
10(A)	OFF
11(B)	OFF
12(C)	OFF

TABULATION II

DEUTSCH DT15-12PA (1)		DEUTSCH DT15-12PB (1)	
CONNECTOR J1 (GREY)		CONNECTOR J2 (BLACK)	
PIN	FUNCTION	PIN	FUNCTION
1	POWER IN, 18 TO 32 VDC	1	VALVE 2-OUT
2	GROUND	2	
3		3	
4	VALVE 1-OUT	4	
5		5	
6	DETECTOR POWER 1-OUT	6	
7	FIRE DETECTOR INPUT ZONE 1	7	
8		8	
9		9	
10		10	
11		11	
12		12	

INTERFACE CONTROL DRAWING

11. APPROXIMATE WIEGHT: 1 lb.
10. VALVE OUTPUTS (J1-4 AND J2-1) OCCUR SIMULTANEOUS AND SHALL PROVIDE A MINIMUM OUTPUT OF 10A THROUGH A 1 OHM LOAD FOR 30 MILLISECONDS.
9. IF THE SYSTEM IS CONNECTED CORRECTLY, THE GREEN "SYSTEM OK" LED WILL BE ON SOLID. IF A TROUBLE CONDITION OCCURS, THE 'SYSTEM OK" LED WILL BLINK. TROUBLE CONDITIONS INCLUDE DISCONNECTED FIRE SENSOR OR EXTINGUISHER, HARNESS SHORT OR OPEN, OR LOW VOLTAGE TO CONTROL MODULE.
8 RESET SWITCH RESETS SYSTEM AFTER A COMPLETE ALARM SEQUENCE. LED BLINKS AFTER A DISCHARGE UNTIL RESET SWITCH IS PUSHED.
7. CAUTION: SWITCH 8 IS SET AT FACTORY. THERE ARE NO USER SELECTABLE OPTIONS OR SERVICABLE ITEMS IN THE CONTROL MODULE. DO NOT OPEN THE UNIT.
6. UNIT IS DESIGNED TO MEET: NEMA TYPE 4X.
5 HOLE SPACING FOR PANEL MOUNTING. MOUNT WITH #8 OR #6 HARDWARE.
4. CONTROL MODULE QUIESCENT CURRENT 50 mA NOMINAL AT 24VDC. POWER INPUT (J1 PIN 1) SHALL HAVE A MINIMUM 40 AMP CAPACITY.
3. GROUND (J1 PIN 2) AND VALVE RETURNS MUST BE GROUNDED AT THE BATTERY GROUND LUG.
2. UNIT OPERATING TEMPERATURE RANGE IS -40°C TO 70°C (-40°F TO 158°F).
1 J1 MATING CONNECTOR IS DEUTSCH DT06-12SA. J2 MATING CONNECTOR IS DEUTSCH DT06-12SB. SOCKET CONNECTOR IS DEUTSCH 046-201-20141. SEE TABULATION II.

NOTES: UNLESS OTHERWISE SPECIFIED.

CAD PREPARED DRAWING USING AUTOCAD 2002
NOT TO BE MANUALLY ALTERED.

PART NO.	NEXT ASSY	USED ON
		M1114
APPLICATION		

UNLESS OTHERWISE SPECIFIED DIMENSIONS ARE IN INCHES AND PER ANSI Y14.5M – 1994
± .XX ± .XXX ± ANGLES
MATERIAL

QTY REQD	CAGE CODE	PART OR IDENTIFYING NO.	NOMENCLATURE OR DESCRIPTION	ITEM NO.
LIST OF MATERIAL				

Kidde Dual Spectrum
A DIVISION OF Kidde Technologies, Inc.
GOLETA, CALIFORNIA, 93117

PREP SIMPSON 6/28/05
CHKR
APVD
APVD

FIRE PROTECTION CONTROL MODULE

SIZE D | CAGE CODE 05BU0 | NUMBER 421700
SCALE NONE | SHEET 1

3704

421700

COPYRIGHT © 2005
KIDDE DUAL SPECTRUM
UNPUBLISHED WORK –
ALL RIGHTS RESERVED

MODEL EFFECTIVITY	SYM	DESCRIPTION	DATE	APPROVED
	–	INITIAL RELEASE	9-17-01	RIM
	A	REVISED AS REQUESTED PER ECR 2643. REVISE BOTTLE P/N WAS –372499–1	12-4-03	VM MP; WWE RE SD RIM
	B	REVISED AS REQUESTED PER ECR 3014. WAS A SIZE FORMAT. ADDED EXTINGUISHER DETAILS.	2.26.05	VM

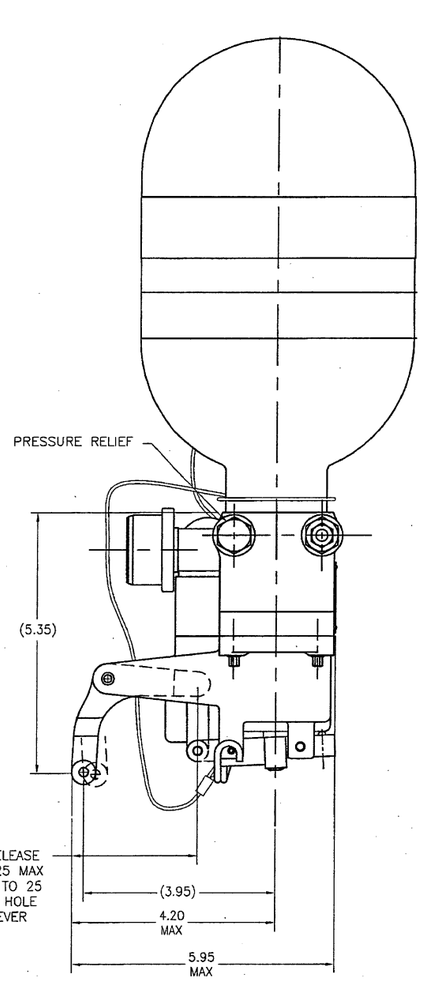

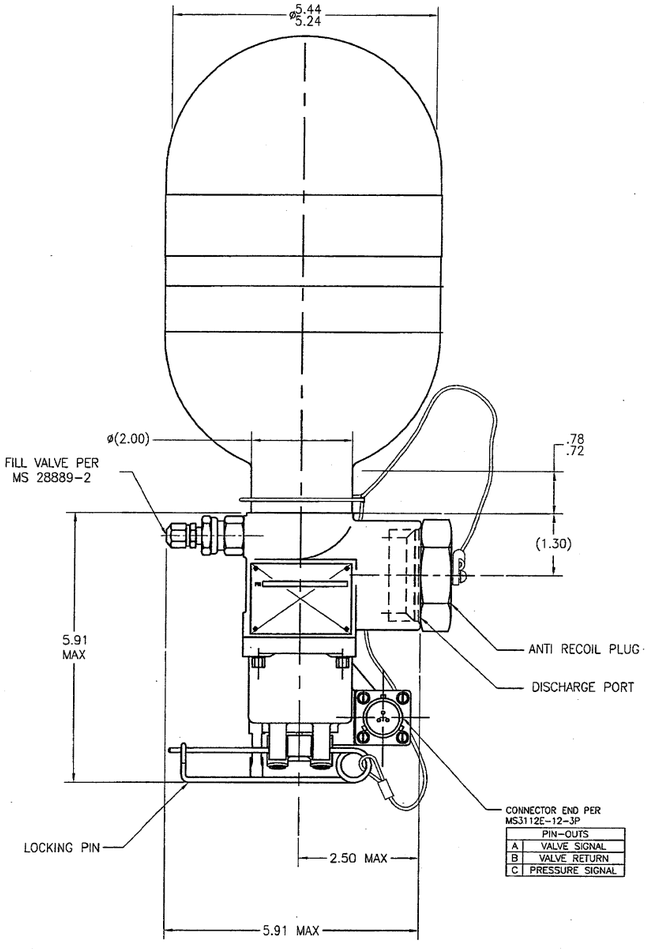

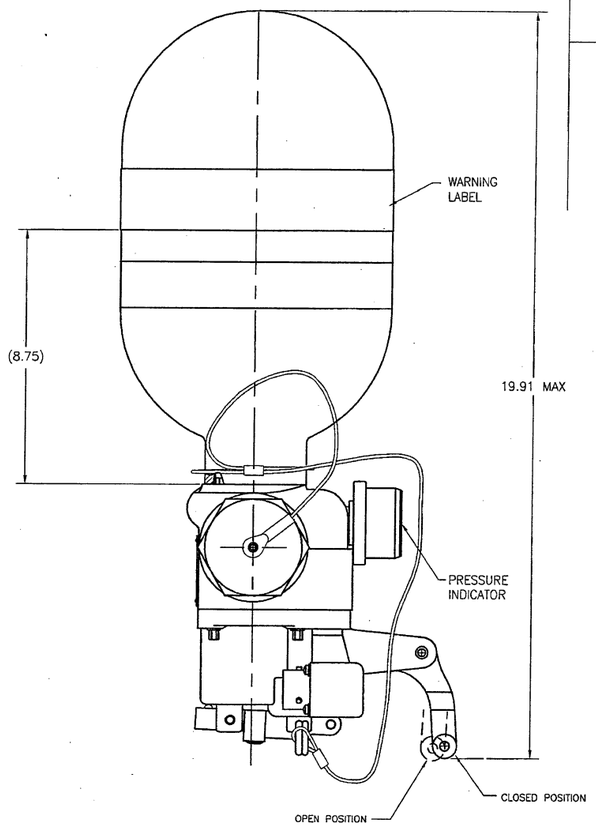

REPAIR PARTS		
NOMENCLATURE	PART NO.	QTY
KIT VALVE ASSY	61423–424617	1
BOTTLE (7 LB)	61423–372555–1	1
O–RING, INLET	61423–7086–0920	1
PLUG & PIN ASSY	61423–446721	1
WARNING LABEL	61423–347682	1

SPECIAL TOOLS	
NOMENCLATURE	PART NO.
RESET TOOL	61423–4811578
GREASE	MIL–G–25013
CROWSFOOT ADAPTER	61423–347238

2. ASSEMBLY SHALL BE FILLED WITH 6.0±0.1 LBS HEPTAFLUOROPROPANE (HFC–227ea), 0.3±0.01 LBS KIDDEX DRY CHEMICAL, AND PRESSURIZED TO 900 PSIG (AT 70°F) WITH NITROGEN.

1. INTERPRET DRAWING PER MIL–STD–100.

NOTES: UNLESS OTHERWISE SPECIFIED.

CAD PREPARED DRAWING USING AUTOCAD R2005
NOT TO BE MANUALLY ALTERED.

PART NO.	NEXT ASSY	USED ON
		STRYKER
APPLICATION		

UNLESS OTHERWISE SPECIFIED DIMENSIONS ARE IN INCHES AND PER ASME Y14.5M–1994
± .XX ± .XXX ± ANGLES
MATERIAL

INTERFACE CONTROL DRAWING

LIST OF MATERIAL

QTY REQD	MANUFACTURER OR CAGE CODE	PART OR IDENTIFYING NO.	NOMENCLATURE OR DESCRIPTION	ITEM NO.

Kidde Dual Spectrum
A DIVISION OF Kidde Technologies, Inc.
GOLETA, CALIFORNIA, 93117

PREP	V. MARIN	4/25/03
CHKR	WWE	5/1/03
APVD	M. PREISER	5/1/03
APVD	G. CHAMBERS	5/1/03

FIRE EXTINGUISHER ASSEMBLY, HFC227–BC

SIZE	CAGE CODE	NUMBER
D	05BU0	421157

SCALE | SHEET

REV B
SHT NO 421157

COPYRIGHT ©2002
KIDDE DUAL SPECTRUM
UNPUBLISHED WORK –
ALL RIGHTS RESERVED

MODEL EFFECTIVITY	SYM	DESCRIPTION	DATE	APPROVED	
	A	INITIAL RELEASE	85-10-28		
	B	ADD TABULATION BLOCK & DIM .XX DIA (TABULATION). ADDED: "ENVELOPE DRAWING" AS REQUESTED BY ECR 444.	92-4-21	AH / WWE	RM / KAZ
	C	ADDED REPAIR PARTS TAB NOTE 2 AND PART NUMBER 11323-55845-X AND DELETED ASSEMBLY FROM TITLE AS REQ BY ECR553.	93-04-15	RM / KAZ	AH / CSC
	D	1 7/8-12UNJF-2A WAS 1 7/8 12UNF-2A AS REQUESTED BY ECR 676.	93-07-08	AH / KAZ	/ CSC
	E	MS28778-24 WAS MS28878-24 AS REQUESTED BY ECR676.	94-08-23	AH / KAZ	HS / CSC
	F	REVISED AND REDRAWN USING ACAD R13 AS REQUESTED BY ECR1001. INCORPORATED NEW COMPANY FORMAT. CAGE CODE WAS 11323. LAV WAS LAV105 IN APPLICATION BOX.	96-11-05	VMM / WWE SEH SD	RTM / CSC
	G	REVISED AS REQUESTED PER ECR 2070. INCORPORATED NEW COMPANY FORMAT. 1 7/8-12-UNJ-2A WAS 1 7/8-12-UNJF-2A	2-5-02	VM	

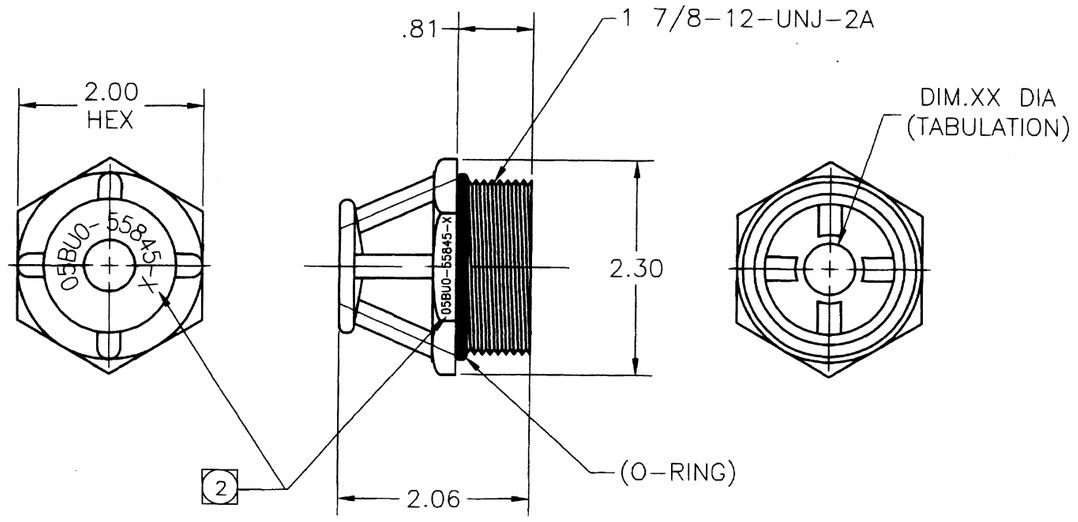

TABULATION	
DIM .XX	ITEM P/N-X
.49/.52	55845-1
.55/.58	55845-2
.61/.64	55845-3
.66/.69	55845-4

REPAIR PARTS	
NOMENCLATURE	PART NO.
O-RING	MS28778-24

ENVELOPE DRAWING

QTY REQD	CAGE CODE	PART OR IDENTIFYING NO.	NOMENCLATURE OR DESCRIPTION	ITEM NO.

LIST OF MATERIAL

2 APPLY PART NUMBER PRECEDED BY CAGE CODE. PER MIL-STD-130 AS SHOWN. LOCATION OPTIONAL.

1. ALL DIMENSIONS ARE FOR REFERENCE ONLY.

NOTES: UNLESS OTHERWISE SPECIFIED

CAD PREPARED DRAWING USING AUTOCAD R14 NOT TO BE MANUALLY ALTERED.

PART NO.	NEXT ASSY	USED ON
BSC	—	LAV
BSC	—	AAV7A1

APPLICATION

UNLESS OTHERWISE SPECIFIED DIMENSIONS ARE IN INCHES AND PER ANSI Y14.5M – 1994

.XX	.XXX	ANGLES
±	±	±

MATERIAL

Kidde Dual Spectrum

A DIVISION OF Kidde Technologies, Inc. GOLETA, CALIFORNIA, 93117

PREP	G. KLANDIK	2/21/84
CHKR	A.HANNON	84/3/21
APVD	W.ELLIOTT	3/32/84
APVD	D.R.LEDBETTER	2 APRIL 84

DEFLECTOR NOZZLE

SIZE	CAGE CODE	NUMBER
C	05BU0	55845

SCALE FULL

SHEET X

FOLD 1

FOLD 2

DWG NO 55845 REV G

1501

FM/TD/EM/AP/PDF/LINK

COPYRIGHT © 2005
KIDDE DUAL SPECTRUM
UNPUBLISHED WORK -
ALL RIGHTS RESERVED

MODEL EFFECTIVITY	REVISIONS			
	SYM	DESCRIPTION	DATE	APPROVED
	-	INITIAL RELEASE	8-2-05	

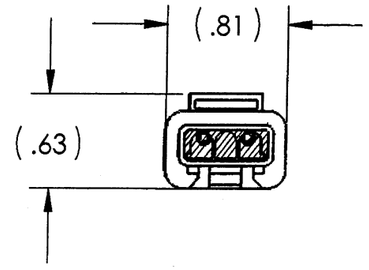

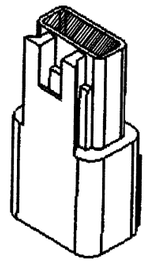

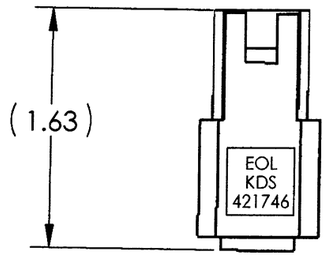

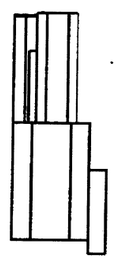

1. OPERATION:
a. THIS ASSEMBLY IS USED IN CONJUNCTION WITH KIDDE CONTROL PANEL 421698 AND OR EXPANSION MODULE 421700 TO PROPERLY TERMINATE FIRE DETECTION CIRCUITS.
b. THIS DEVICE MAY BE USED WITH OPTICAL FIRE DETECTOR 421696.

2. SPECIFICATION:
a. OPERATING TEMPERATURE: -40°C TO +125°C (-40°F TO + 257°F)
b. NOMINAL WEIGHT: .1LB
c. MATING CONNECTOR: 3 POSITION DEUTSCH PLUG DTM06-3S.

3. INSTALLATION
a. ASSEMBLY MAY BE MOUNTED IN AN INTERIOR OR EXTERIOR LOCATION PROVIDED THE LOCATION WILL NOT EXCEED MAXIMUM OPERATING TEMPERATURES OR BE SUBJECT TO EXCESSIVE ENVIRONMENTAL EXTREMES.
b. ASSEMBLY SHALL BE CONNECTED TO J2 OF THE LAST FIRE DETECTOR IN EACH SERIES OF DETECTORS.

NOTES: UNLESS OTHERWISE SPECIFIED

CAD PREPARED DRAWING USING SOLIDWORKS 2004
NOT TO BE MANUALLY ALTERED.

PART NO.	NEXT ASSY	USED ON
APPLICATION		

UNLESS OTHERWISE SPECIFIED
DIMENSIONS ARE IN INCHES
AND PER ANSI Y14.5M - 1994

.XX ±	.XXX ±	ANGLES ±

MATERIAL

INTERFACE CONTROL DRAWING

QTY REQD	MANUFACTURER OR CAGE CODE	PART OR IDENTIFYING NO.	NOMENCLATURE OR DESCRIPTION	ITEM NO.
			LIST OF MATERIAL	

Kidde Dual Spectrum
A DIVISION OF
Kidde Technologies, Inc.
GOLETA, CALIFORNIA, 93117

PREP	V. MARIN	7/12/05
CHKR	E. Eversoll	8-2-05
APVD	E. Eversoll	8-2-05
APVD	John Wat	8/2/05

END OF LINE DEVICE

SIZE	CAGE CODE	NUMBER
B	05BU0	421746

SCALE | SHEET

REV -
DWG NO. 421746

COPYRIGHT © 2005
KIDDE DUAL SPECTRUM
UNPUBLISHED WORK –
ALL RIGHTS RESERVED

MODEL EFFECTIVITY	REVISIONS			
	SYM	DESCRIPTION	DATE	APPROVED
	–	INITIAL RELEASE		

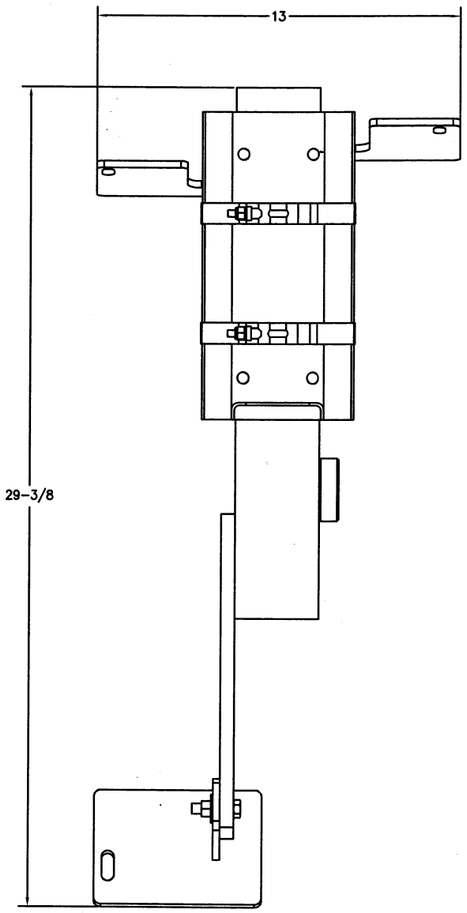

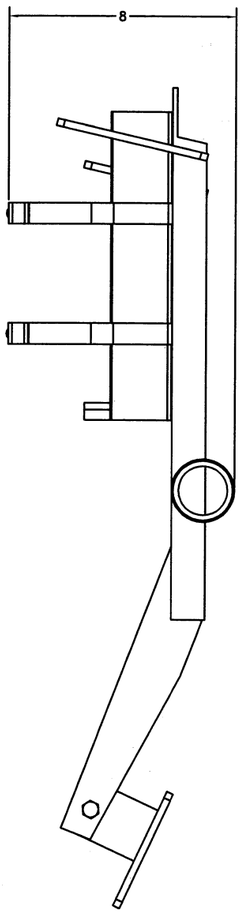

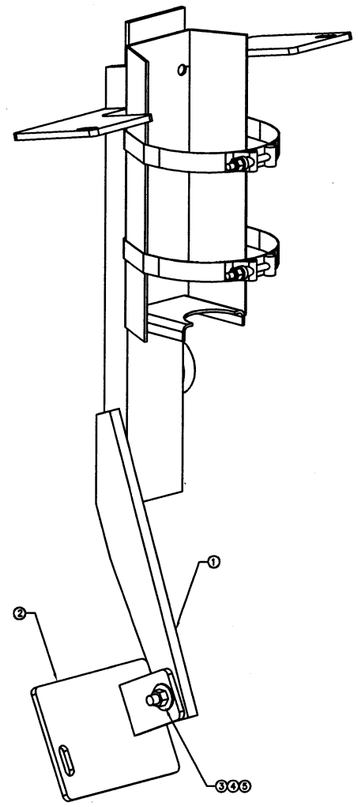

WARNING-NOT RELEASED

THIS DOCUMENT IS NOT RELEASED.
DO NOT USE FOR PRODUCTION
UNLESS YOUR PURCHASE ORDER OR INSTRUCTIONS
SPECIFY USE OF AN UNRELEASED DOCUMENT
WITH THE DATE OF ISSUE SHOWN HERE
DATED: 8/17/05
REVISION LEVELS ISSUED
PRIOR TO THIS DATE ARE OBSOLETE.

QTY REQD	MANUFACTURER OR CAGE CODE	PART OR IDENTIFYING NO.	NOMENCLATURE OR DESCRIPTION	ITEM NO.
1		–	3/8-16 LOCKNUT	5
1		–	3/8 ID FLAT WASHER	4
1		–	3/8-16 X 1.5 LG CAP SCREW	3
1		421780	FOOT PLATE	2
1		421751	WELDMENT, BRACKET	1

LIST OF MATERIAL

1. INTERPRET DRAWING PER MIL-STD-100.

NOTES: UNLESS OTHERWISE SPECIFIED.

CAD PREPARED DRAWING USING AUTOCAD R2005
NOT TO BE MANUALLY ALTERED.

PART NO.	NEXT ASSY	USED ON
APPLICATION		

UNLESS OTHERWISE SPECIFIED DIMENSIONS ARE IN INCHES AND PER ASME Y14.5M-1994
± XX ± .XXX ± ANGLES
MATERIAL

Kidde Dual Spectrum
A DIVISION OF
Kidde Technologies, Inc.
GOLETA, CALIFORNIA, 93117

PREP	W. Elliott	7/17/05
CHKR		
APVD		
APVD		

CREW EXTINGUISHER BRACKET ASSEMBLY KIT

SIZE	CAGE CODE	NUMBER
D	05BU0	421749

SCALE SHEET

421749

COPYRIGHT © 2005
KIDDE DUAL SPECTRUM
UNPUBLISHED WORK –
ALL RIGHTS RESERVED

MODEL EFFECTIVITY	REVISIONS			
	SYM	DESCRIPTION	DATE	APPROVED

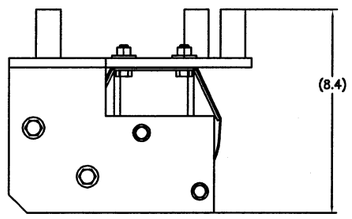

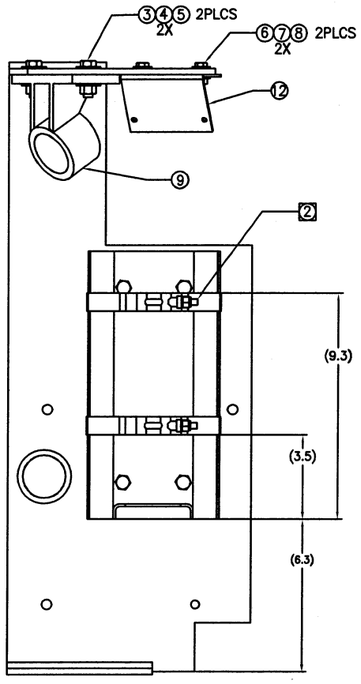

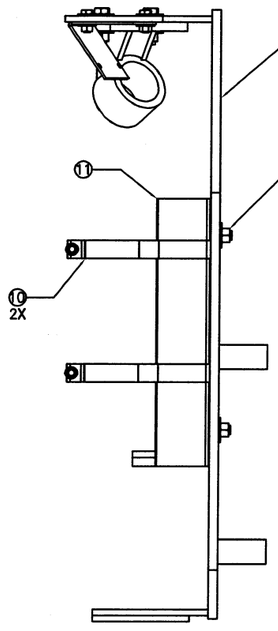

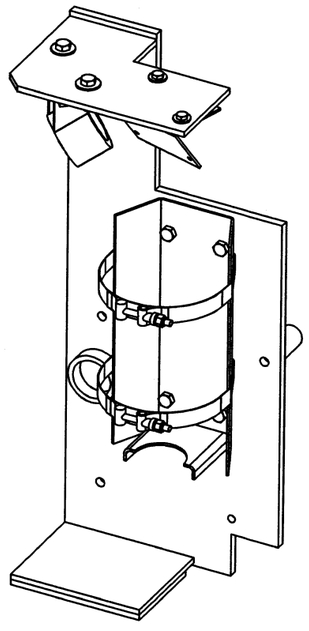

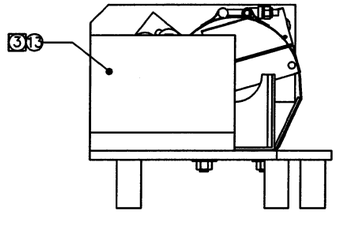

QTY REQD	MANUFACTURER OR CAGE CODE	PART OR IDENTIFYING NO.	NOMENCLATURE OR DESCRIPTION	ITEM NO.
6"		8456K745	RUBBER STRIP, ADHESIVE BACKED, 4" X 36"	13
1		421758	CARGO SENSOR BRACKET	12
1		406332	FIRE EXTINGUISHER BRACKET	11
2		C-420C-75-584S	BAND CLAMP	10
1		421096	NOZZLE MOUNT BRACKET	9
2		–	1/4-20 LOCK NUT	8
4		–	1/4 ID FLAT WASHER	7
2		–	1/4-20 X 1.00 LG CAP SCREW	6
6		–	3/8-16 LOCK NUT	5
8		–	3/8 ID FLAT WASHER	4
2		–	3/8-16 X 1.5 LG CAP SCREW	3
4		–	3/8-16 X 1 LG CAP SCREW	2
1		421753	CARGO EXTINGUISHER BRACKET	1

LIST OF MATERIAL

3. CUT RUBBER STRIP (ITEM 13) TO 6 INCH LENGTH AND INSTALL AS SHOWN.
2. ASSEMBLE BRACKET COMPONETS AND INSTALL CLAMPS IN ORIENTATION SHOWN.
1. INTERPRET DRAWING PER MIL-STD-100.

NOTES: UNLESS OTHERWISE SPECIFIED.

CAD PREPARED DRAWING USING AUTOCAD R2002
NOT TO BE MANUALLY ALTERED.

PART NO.	NEXT ASSY	USED ON
		M1114
APPLICATION		

UNLESS OTHERWISE SPECIFIED DIMENSIONS ARE IN INCHES AND PER ASME Y14.5M-1994
.XX ± | .XXX ± | ANGLES ±
MATERIAL

Kidde Dual Spectrum
A DIVISION OF
Kidde Technologies, Inc.
GOLETA, CALIFORNIA, 93117

PROP	K.MURRAY	8/02/05
CHKR		
APVD		
APVD		

CARGO EXTINGUISHER BRACKET ASSEMBLY KIT

SIZE	CAGE CODE	NUMBER
D	05BU0	421750
SCALE		SHEET

421750 -

COPYRIGHT © 2005
KIDDE DUAL SPECTRUM
UNPUBLISHED WORK –
ALL RIGHTS RESERVED

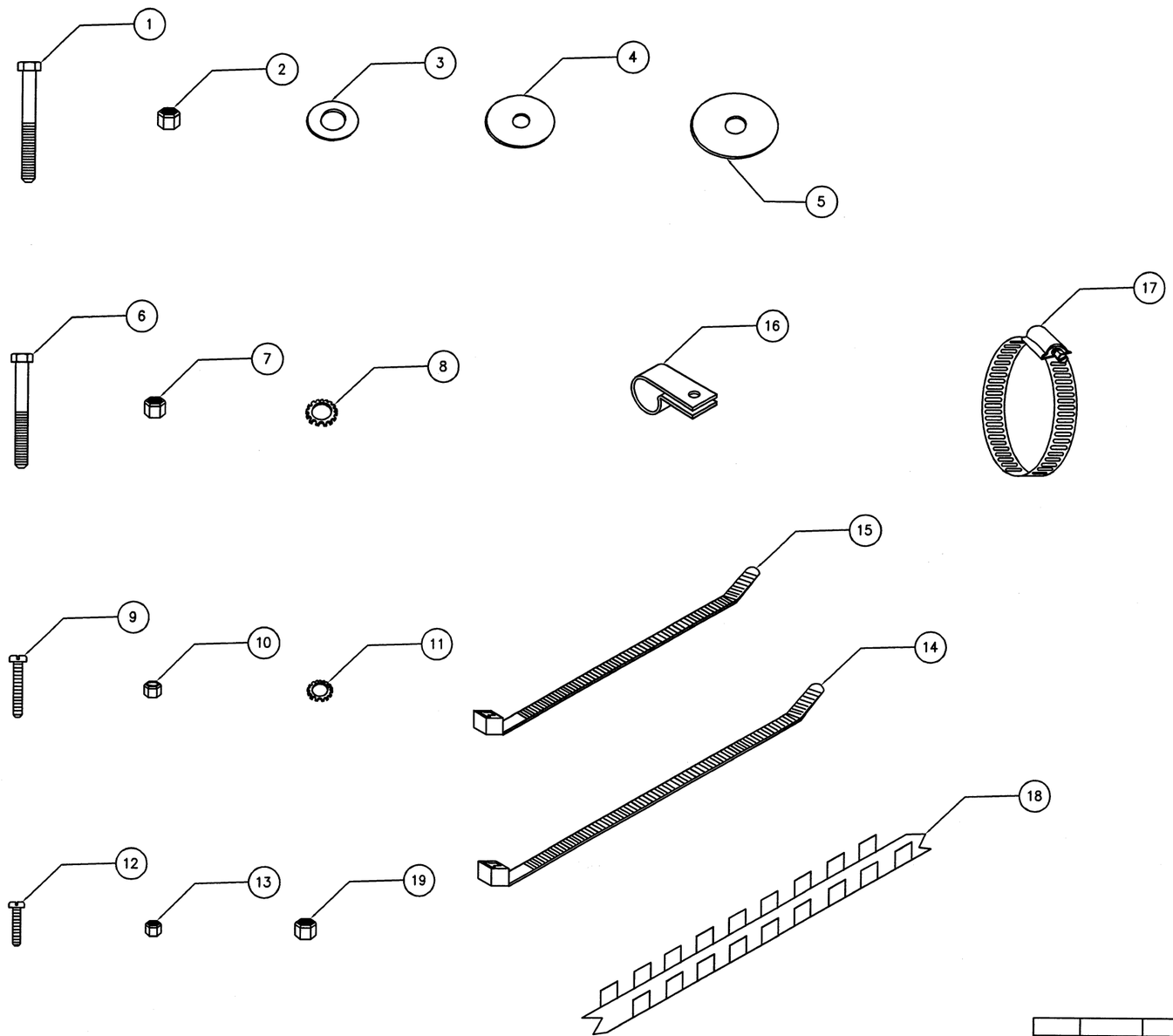

MODEL EFFECTIVITY	REVISIONS			
	SYM	DESCRIPTION	DATE	APPROVED

QTY REQD	MANUFACTURER OR CAGE CODE	PART OR IDENTIFYING NO.	NOMENCLATURE OR DESCRIPTION	ITEM NO.
4			1/4-20 LOCKNUT, DISTORTED THREAD	19
8"			EDGE GROMMET, 1/8 WIDE	18
2			HOSE CLAMP, 2.5" NOMINAL	17
4			0.5 DIA.CUSHOINED CLAMP	16
24			8 INCH TIE-WRAP	15
24			11 INCH TIE-WRAP	14
2			#8-32 LOCKNUT	13
2			#8-32 X 0.50 PHILLIPS PAN HEAD SCREW	12
6			#10 STAR WASHER	11
6			#10-24 LOCKNUT	10
6			#10-24 X 0.75 LG. PHILLIPS PAN HEAD SCREW	9
2			1/4 ID STAR WASHER	8
1			5/16-18 LOCKNUT	7
1			5/16-18 X 3.5 LG. CAP SCREW, GRADE 5	6
4			3/8 X 2 DIA. BODY WASHER	5
4			3/8 X 1 1/2 DIA. BODY WASHER	4
3			3/8 FLAT WASHER	3
3			3/8-16 LOCKNUT	2
3			3/8-16 X 3.5 LG.CAP SCREW, GRADE 5	1

LIST OF MATERIAL

NOTES: UNLESS OTHERWISE SPECIFIED.

CAD PREPARED DRAWING USING AUTOCAD R2002
NOT TO BE MANUALLY ALTERED.

PART NO.	NEXT ASSY	USED ON
		M1114

APPLICATION

UNLESS OTHERWISE SPECIFIED
DIMENSIONS ARE IN INCHES
AND PER ASME Y14.5M-1994

.XX	.XXX	ANGLES
±	±	±

MATERIAL

Kidde Dual Spectrum

A DIVISION OF
Kidde Technologies, Inc.
GOLETA, CALIFORNIA, 93117

PREP K.MURRAY 8/03/05
CHKR
APVD
APVD

MOUNTING HARDWARE KIT

SIZE	CAGE CODE	NUMBER
D	05BU0	421755

SCALE SHEET

421755

COPYRIGHT © 2005
KIDDE DUAL SPECTRUM
UNPUBLISHED WORK –
ALL RIGHTS RESERVED

MODEL EFFECTIVITY	REVISIONS			
	SYM	DESCRIPTION	DATE	APPROVED
	—	INITIAL RELEASE		

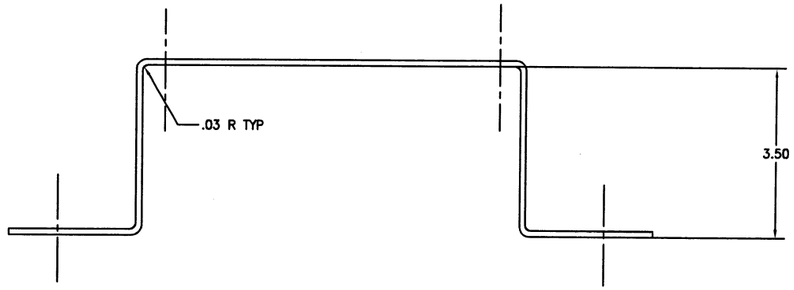

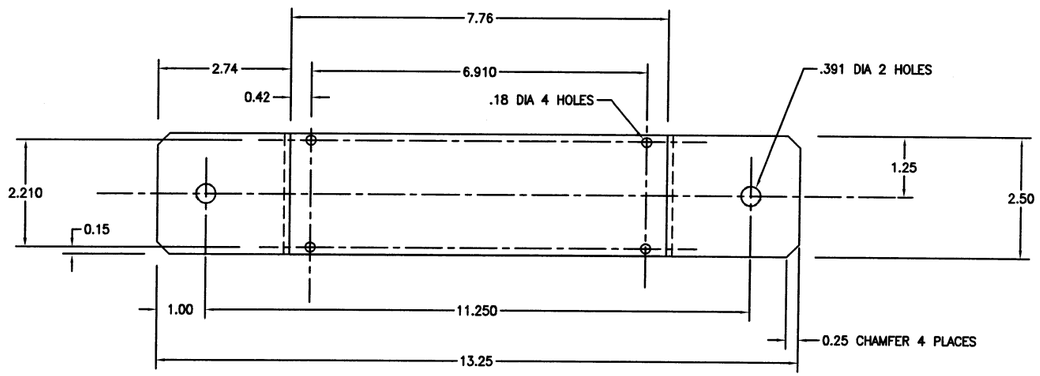

2. FINAL PROTECTIVE FINISH:
   CLEAN PER APPLICABLE METHOD OF SPEC TT-C-490. TREAT PER TYPE I OR III, SPEC TT-C-490. PRIMER AND TOPCOAT SHALL BE IN ACCORDANCE WITH GENERAL REQUIREMENTS DRAWING NO. 12344343, COLOR 383 OLIVE DRAB.
1. INTERPRET DRAWING PER MIL-STD-100.

NOTES: UNLESS OTHERWISE SPECIFIED.

CAD PREPARED DRAWING USING AUTOCAD R2005
NOT TO BE MANUALLY ALTERED.

PART NO.	NEXT ASSY	USED ON
APPLICATION		

UNLESS OTHERWISE SPECIFIED DIMENSIONS ARE IN INCHES AND PER ASME Y14.5M-1994
XX ±.03 | XXX ±.010 | ANGLES ±2°

MATERIAL
14 GAGE LOW CARBON STEEL

QTY REQD	MANUFACTURER OR CAGE CODE	PART OR IDENTIFYING NO.	NOMENCLATURE OR DESCRIPTION	ITEM NO.
LIST OF MATERIAL				

Kidde Dual Spectrum
A DIVISION OF
Kidde Technologies, Inc.
GOLETA, CALIFORNIA, 93117

PREP	W. Elliott	7/21/05
CHKR		
APVD		
APVD		

BRACKET, EXPANSION MODULE

SIZE	CAGE CODE	NUMBER
D	05BU0	421759
SCALE		SHEET

421759

COPYRIGHT © 2005
KIDDE DUAL SPECTRUM
UNPUBLISHED WORK -
ALL RIGHTS RESERVED

MODEL EFFECTIVITY	REVISIONS			
	SYM	DESCRIPTION	DATE	APPROVED

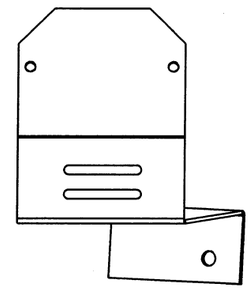

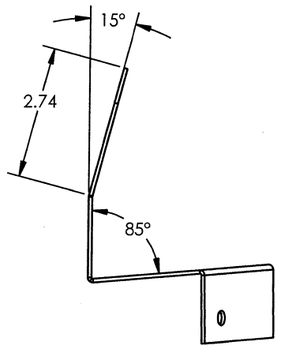

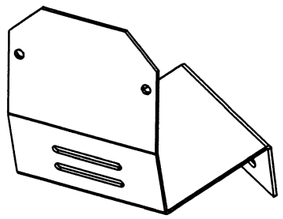

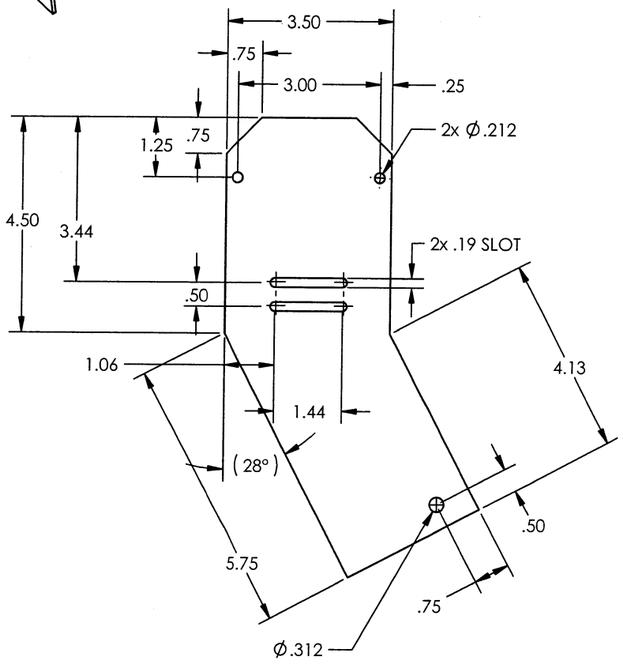

FLAT PATTERN

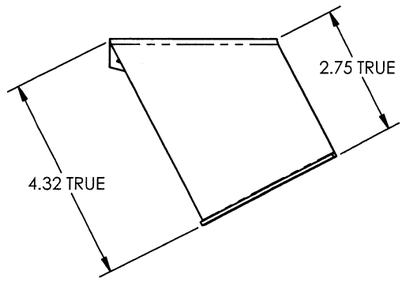

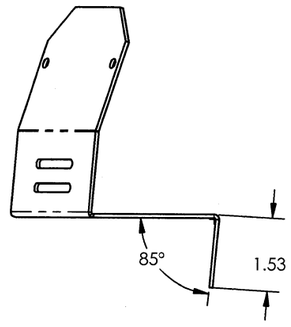

1. FINAL PROTECTIVE FINISH:
CLEAN PER APPLICABLE METHOD OF SPEC TT-C-490. TREAT PER TYPE I OR III, SPEC TT-C-490. PRIMER AND TOPCOAT SHALL BE IN ACCORDANCE WITH GENERAL REQUIREMENTS DRAWING NO. 12344343, COLOR 383 OLIVE DRAB.

NOTES: UNLESS OTHERWISE SPECIFIED

CAD PREPARED DRAWING USING SOLIDWORKS 2004 NOT TO BE MANUALLY ALTERED

PART NO.	NEXT ASSY	USED ON
		M1114
APPLICATION		

UNLESS OTHERWISE SPECIFIED
DIMENSIONS ARE IN INCHES
AND PER ASME Y14.5M-1994

.XX	.XXX	ANGLES
.03	.010	2°

MATERIAL

16 GAGE LOW CARBON STEEL

QTY REQD	MANUFACTURER OR CAGE CODE	PART OR IDENTIFYING NO.	NOMENCLATURE OR DESCRIPTION	ITEM NO.

LIST OF MATERIAL

Kidde Dual Spectrum

A DIVISION OF
Kidde Technologies, Inc.
GOLETA, CALIFORNIA, 93117

PREP	SIMPSON	7/29/05
CHKR		
APVD		
APVD		

BRACKET
LEFT CREW SENSOR

SIZE	CAGE CODE	NUMBER
C	05BU0	421760

SCALE | SHEET

FOLD 2

REV NR

DWG NO 421760

FOLD 1

COPYRIGHT © 2005
KIDDE DUAL SPECTRUM
UNPUBLISHED WORK -
ALL RIGHTS RESERVED

MODEL EFFECTIVITY	REVISIONS			
	SYM	DESCRIPTION	DATE	APPROVED

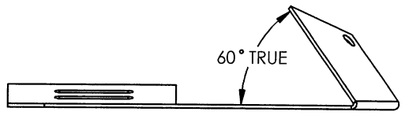

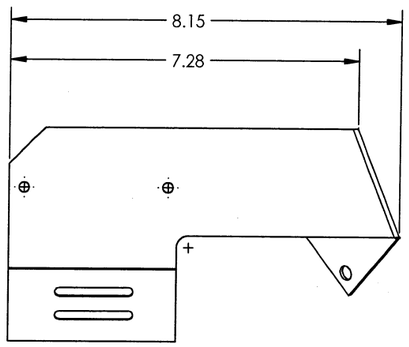

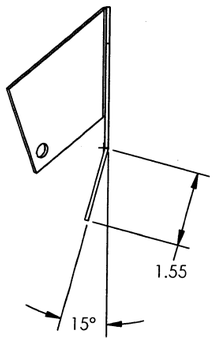

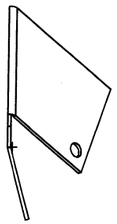

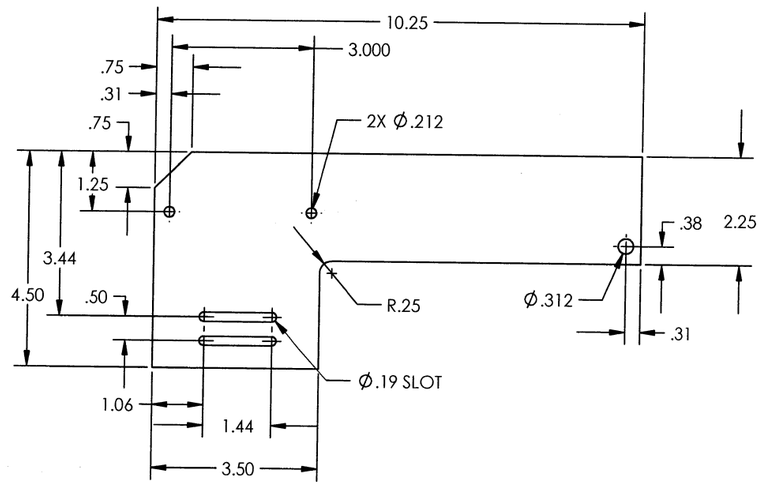

FLAT PATTERN

1. FINAL PROTECTIVE FINISH:
   CLEAN PER APPLICABLE METHOD OF SPEC
   TT-C-490. TREAT PER TYPE I OR III, SPEC
   TT-C-490. PRIMER AND TOPCOAT SHALL BE
   IN ACCORDANCE WITH GENERAL REQUIREMENTS
   DRAWING NO. 12344343, COLOR 383 OLIVE DRAB.

NOTES: UNLESS OTHERWISE SPECIFIED

CAD PREPARED DRAWING USING SOLIDWORKS
2004 NOT TO BE MANUALLY ALTERED

PART NO.	NEXT ASSY	USED ON
		M1114
APPLICATION		

UNLESS OTHERWISE SPECIFIED
DIMENSIONS ARE IN INCHES
AND PER ASME Y14.5M-1994

.XX	.XXX	ANGLES
.03	.01	1°

MATERIAL

16 GAGE LOW
CARBON STEEL

QTY REQD	MANUFACTURER OR CAGE CODE	PART OR IDENTIFYING NO.	NOMENCLATURE OR DESCRIPTION	ITEM NO.

LIST OF MATERIAL

Kidde Dual Spectrum

A DIVISION OF
Kidde Technologies, Inc.
GOLETA, CALIFORNIA, 93117

PREP		
	SIMPSON	7/29/05
CHKR		
APVD		
APVD		

BRACKET
RIGHT CREW FIRE SENSOR

SIZE	CAGE CODE	NUMBER
C	05BU0	421761

SCALE		SHEET

FOLD 2

REV -

DWG NO 421761

FOLD 1

COPYRIGHT © 2005
KIDDE DUAL SPECTRUM
UNPUBLISHED WORK –
ALL RIGHTS RESERVED

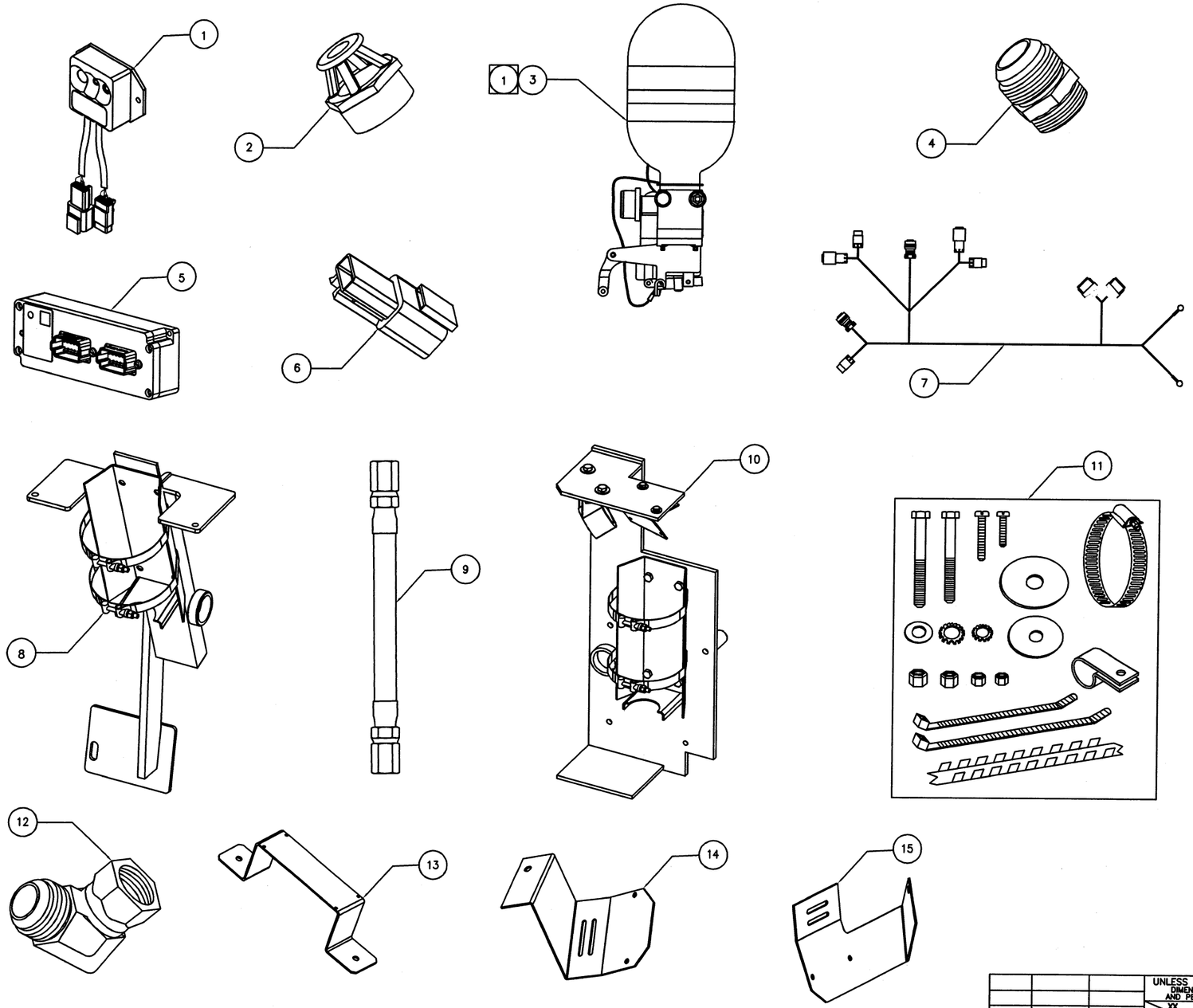

MODEL EFFECTIVITY	REVISIONS			
	SYM	DESCRIPTION	DATE	APPROVED

QTY REQD	MANUFACTURER OR CAGE CODE	PART OR IDENTIFYING NO.	NOMENCLATURE OR DESCRIPTION	ITEM NO.
1		421761	BRACKET, RIGHT CREW SENSOR	15
1		421760	BRACKET, LEFT CREW SENSOR	14
1		421759	BRACKET, CONTROL MODULE	13
2		SAE 070221-20-20S	ELBOW, SWIVEL, 90, STEEL	12
1		421755	MOUNTING HARDWARE KIT	11
1		421750	BRACKET, CARGO EXTINGUISHER KIT	10
1		421781	HOSE ASSEMBLY	9
1		421749	BRACKET, CREW EXTINGUISHER KIT	8
1		421748	WIRING HARNESS	7
1		421746	END OF LINE DEVICE	6
1		421700	CONTROL MODULE	5
2		SAE 070120-24-20	HOSE ADAPTER, STEEL	4
1 2		421157	FIRE EXTINGUISHER	3
2		55845-4	NOZZLE DEFLECTOR	2
3		421696	FIRE SENSOR, PM-3MT	1

LIST OF MATERIAL

1 EXTINGUISHER 421157 IS PART OF THIS KIT, BUT IS PACKAGED AND SHIPPED SEPARATELY.

NOTES: UNLESS OTHERWISE SPECIFIED.

CAD PREPARED DRAWING USING AUTOCAD R2002
NOT TO BE MANUALLY ALTERED.

PART NO.	NEXT ASSY	USED ON
		M1114

APPLICATION

UNLESS OTHERWISE SPECIFIED
DIMENSIONS ARE IN INCHES
AND PER ASME Y14.5M-1994

.XX	.XXX	ANGLES
±	±	±

MATERIAL

Kidde Dual Spectrum

A DIVISION OF
Kidde Technologies, Inc.
GOLETA, CALIFORNIA, 93117

PREP K.MURRAY 8/03/05
CHKR
APVD
APVD

M1114 AFES KIT

SIZE	CAGE CODE	NUMBER
D	05BU0	421783

SCALE SHEET

421783